D4E225-CC01-54

AC centrifugal fan

forward curved, dual inlet

with housing (flange)

ebm-papst Mulfingen GmbH & Co. KG
Bachmühle 2 · D-74673 Mulfingen
Phone +49 7938 81-0
Fax +49 7938 81-110
info1@de.ebmpapst.com
www.ebmpapst.com

Limited partnership · Headquarters Mulfingen
County court Stuttgart · HRA 590344

General partner Elektrobau Mulfingen GmbH · Headquarters Mulfingen
County court Stuttgart · HRB 590142

ErP2015 EXCEEDS THE NORM

Nominal data

Type	**D4E225-CC01-54**
Motor	**M4E074-LA**

Phase		1~
Nominal voltage	VAC	230
Frequency	Hz	50
Type of data definition		ml
Valid for approval / standard		CE
Speed	min^{-1}	1090
Power input	W	670
Current draw	A	2.92
Motor capacitor	µF	20
Capacitor voltage	VDB	400
Capacitor standard		P2 (CE)
Min. back pressure	Pa	160
Min. ambient temperature	°C	-25
Max. ambient temperature	°C	35

ml = Max. load · me = Max. efficiency · fa = Running at free air · cs = Customer specs · cu = Customer unit
Subject to alterations

Data according to ErP directive

Installation category	B
Efficiency category	Total
Variable speed drive	No
Specific ratio*	1.00

* Specific ratio = 1 + p_f / 100 000 Pa

		Actual	Request 2013	Request 2015
Overall efficiency η_e	%	40.7	33.7	40.7
Efficiency grade N		49	42	49
Power input P_e	kW	0.48		
Air flow q_v	m^3/h	1900		
Pressure increase p_f	Pa	356		
Speed n	min^{-1}	1330		

Data definition with optimum efficiency. LU-135955
The ErP data is determined using a motor-impeller combination in a standardised measurement configuration.

AC centrifugal fan

forward curved, dual inlet

with housing (flange)

Technical features

Mass	12 kg
Size	225 mm
Material of impeller	Sheet steel, galvanised
Housing material	Sheet steel, galvanised
Motor suspension	Motor mounted anti-vibration on both sides
Direction of rotation	Counter-clockwise, seen on rotor
Type of protection	IP 22
Insulation class	"F"
Humidity class	F2-1
Max. permissible ambient motor temp. (transp./ storage)	+ 80 °C
Min. permissible ambient motor temp. (transp./storage)	- 40 °C
Mounting position	Any
Condensate discharge holes	None
Operation mode	S1
Motor bearing	Ball bearing
Touch current acc. IEC 60990 (measuring network Fig. 4, TN system)	< 0.75 mA
Motor protection	Thermal overload protector (TOP) brought out
Protection class	I (if protective earth is connected by customer)
Product conforming to standard	EN 60335-1; CE

ebm-papst Mulfingen GmbH & Co. KG · Bachmühle 2 · D-74673 Mulfingen · Phone +49 (0) 7938 81-0 · Fax +49 (0) 7938 81-110 · info1@de.ebmpapst.com · www.ebmpapst.com

AC centrifugal fan

forward curved, dual inlet

with housing (flange)

Product drawing

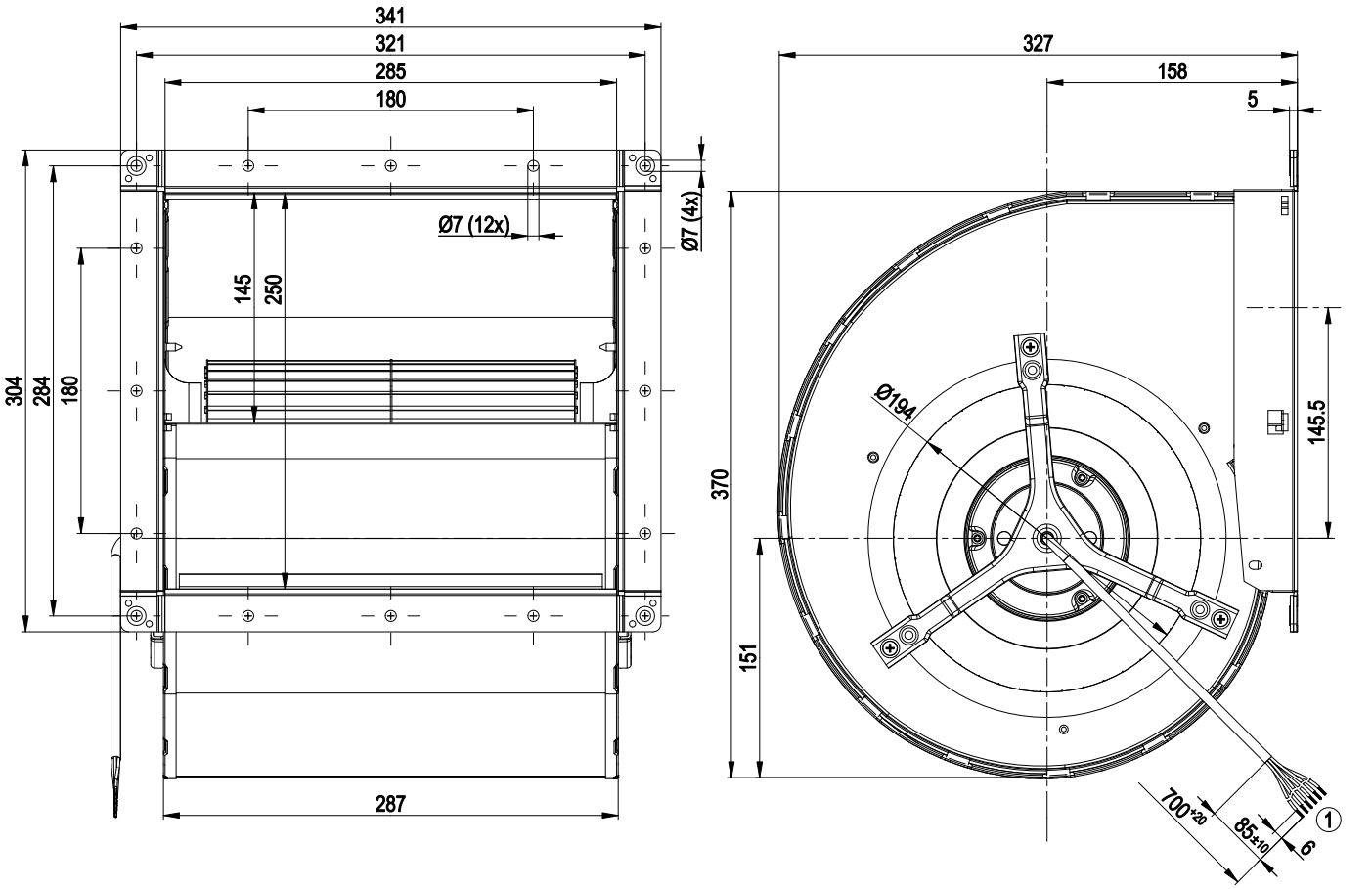

1	Connection line ETFE AWG20, 6x lead tips crimped

Connection screen

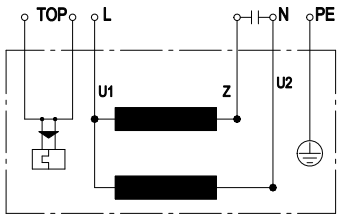

U1	Blue	Z	brown	U2	black
PE	green/yellow	TOP	2 x grey		

ebm-papst Mulfingen GmbH & Co. KG · Bachmühle 2 · D-74673 Mulfingen · Phone +49 (0) 7938 81-0 · Fax +49 (0) 7938 81-110 · info1@de.ebmpapst.com · www.ebmpapst.com

AC centrifugal fan

forward curved, dual inlet

with housing (flange)

Charts: Air flow 50 Hz

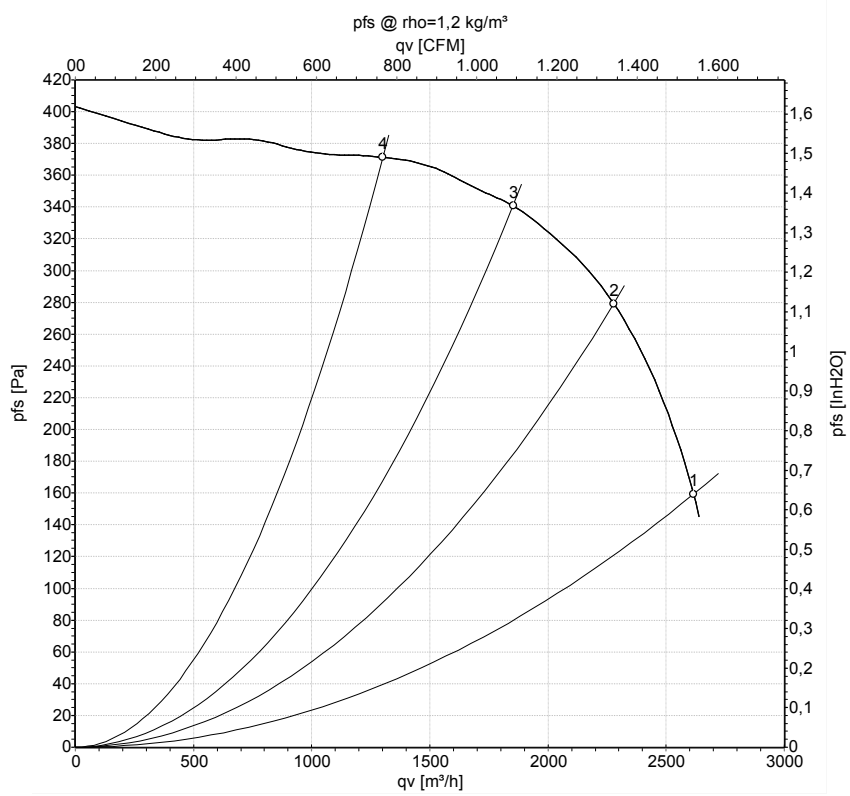

Measurement: LU-135955

Air performance measured as per ISO 5801 Installation category A. For detailed information on the measuring set-up, please contact ebm-papst. Suction-side noise levels: LwA measured as per ISO 13347 / LpA measured with 1m distance to fan axis. The values given are valid under the measuring conditions mentioned above and may vary according to the actual installation situation. With any deviation from the standard set-up, the specific values have to be checked and reviewed with the unit installed.

Measured values

	U	f	n	P_e	I	qv	p_{fs}
	V	Hz	min^{-1}	W	A	m^3/h	Pa
1	230	50	1090	670	2.92	2615	160
2	230	50	1250	562	2.49	2280	280
3	230	50	1335	474	2.13	1850	340
4	230	50	1390	393	1.83	1300	370

U = Supply voltage · f = Frequency · n = Speed · P_e = Power input · I = Current draw · qv = Air flow · p_{fs} = Pressure increase

ebm-papst Mulfingen GmbH & Co. KG · Bachmühle 2 · D-74673 Mulfingen · Phone +49 (0) 7938 81-0 · Fax +49 (0) 7938 81-110 · info1@de.ebmpapst.com · www.ebmpapst.com