K2E225-RB92-09

AC centrifugal fan

backward curved

with housing and angle bracket

ebm-papst Mulfingen GmbH & Co. KG
Bachmühle 2 · D-74673 Mulfingen
Phone +49 7938 81-0
Fax +49 7938 81-110
info1@de.ebmpapst.com
www.ebmpapst.com

Limited partnership · Headquarters Mulfingen
County court Stuttgart · HRA 590344

General partner Elektrobau Mulfingen GmbH · Headquarters Mulfingen
County court Stuttgart · HRB 590142

ErP2015 EXCEEDS THE NORM

Nominal data

Type	**K2E225-RB92-09**
Motor	**M2E068-DF**

Phase		1~	1~	1~
Nominal voltage	VAC	230	230	230
Frequency	Hz	50	60	60
Type of data definition		ml	ml	ml
Valid for approval / standard		CE	CE	UL 2111
Speed	min^{-1}	2550	2700	2700
Power input	W	145	200	215
Current draw	A	0.64	0.88	09
Motor capacitor	µF	3.5	3.5	3.5
Capacitor voltage	VDB	450	450	450
Capacitor standard		-	-	UL
Min. back pressure	Pa	0	0	0
Min. ambient temperature	°C	-25	-25	-25
Max. ambient temperature	°C	60	60	60
Starting current	A	1.25	1.2	

ml = max. load · me = max. efficiency · fa = running at free air · cs = customer specs · cu = customer unit
Subject to alterations

Data according to ErP directive

Installation category	A
Efficiency category	Static
Variable speed drive	No
Specific ratio*	1.00

* Specific ratio = 1 + p_{fs} / 100 000 Pa

		Actual	Request 2013	Request 2015
Overall efficiency η_{es}		42.5	38.5	42.5
Efficiency grade N		62	58	62
Power input P_e	kW	0.14		
Air flow q_v	m^3/h	705		
Pressure increase p_{fs}	Pa	320		
Speed n	min^{-1}	2560		

Data established at point of optimum efficiency

ebmpapst

AC centrifugal fan

backward curved

with housing and angle bracket

Technical features

Mass	4.1 kg
Size	225 mm
Surface of rotor	Coated in black
Material of impeller	PA plastic
Housing material	PA plastic; sheet steel, galvanised
Number of blades	7
Direction of rotation	Clockwise, seen on rotor
Type of protection	IP 44; Depending on installation and position as per EN 60034-5
Insulation class	"F"
Humidity class	F1-2
Max. permissible ambient motor temp. (transp./ storage)	+ 80 °C
Min. permissible ambient motor temp. (transp./storage)	- 40 °C
Mounting position	Shaft horizontal or rotor on bottom; rotor on top on request
Condensate discharge holes	Rotor-side
Operation mode	S1
Motor bearing	Ball bearing
Touch current acc. IEC 60990 (measuring network Fig. 4, TN system)	< 0.75 mA
Electrical leads	Capacitor mounted
Motor protection	Thermal overload protector (TOP) wired internally
Protection class	I (if protective earth is connected by customer)
Product conforming to standard	EN 60335-1; CE
Approval	UL 2111; CSA C22.2 Nr.77

ebm-papst Mulfingen GmbH & Co. KG · Bachmühle 2 · D-74673 Mulfingen · Phone +49 (0) 7938 81-0 · Fax +49 (0) 7938 81-110 · info1@de.ebmpapst.com · www.ebmpapst.com

AC centrifugal fan

backward curved

with housing and angle bracket

Product drawing

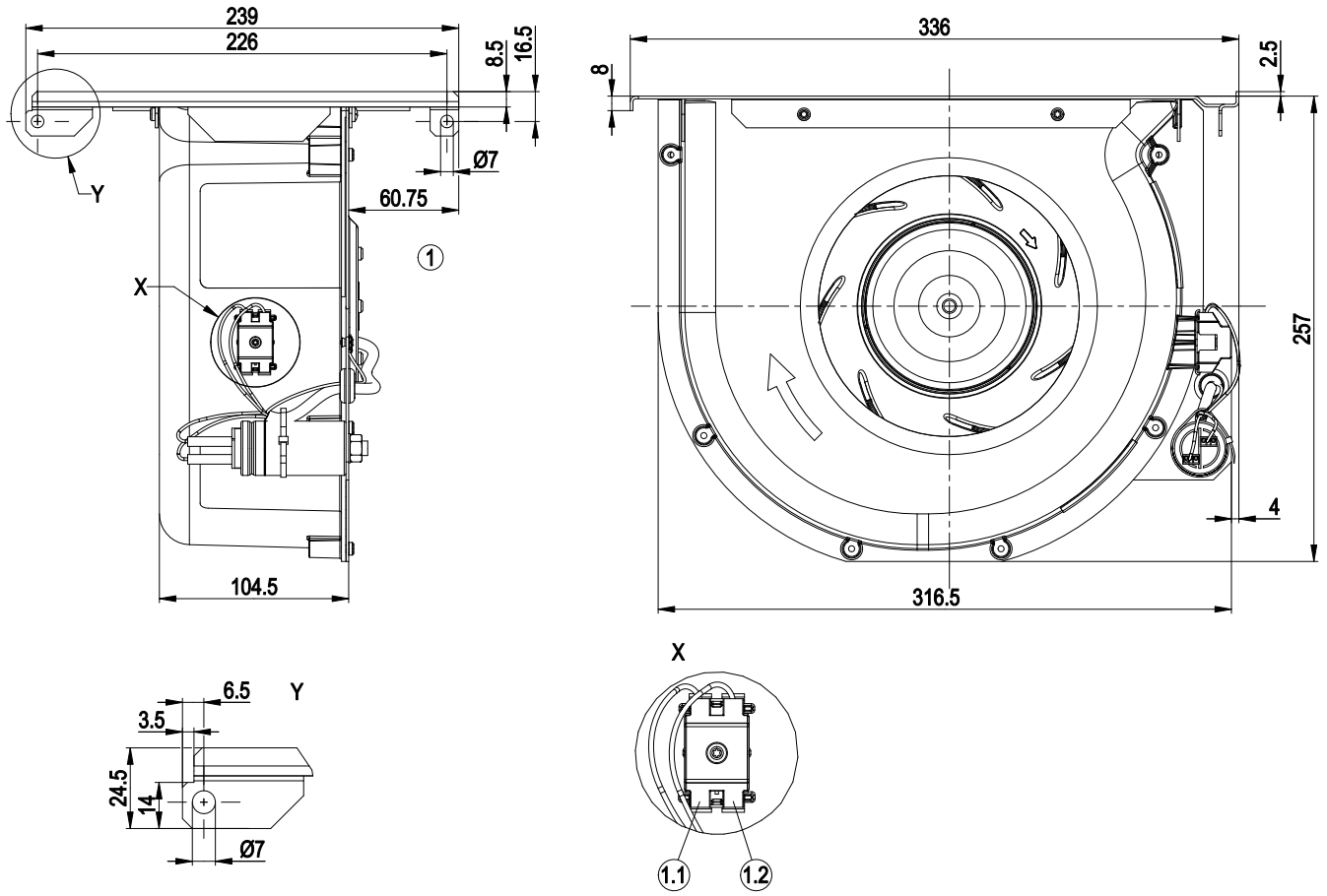

1	Connection line PFA AWG20
1.1	Blue
1.2	black

Connection screen

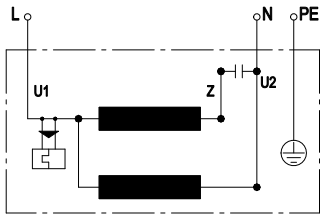

U1	blue	Z	brown	U2	black
PE	green/yellow				

ebm-papst Mulfingen GmbH & Co. KG · Bachmühle 2 · D-74673 Mulfingen · Phone +49 (0) 7938 81-0 · Fax +49 (0) 7938 81-110 · info1@de.ebmpapst.com · www.ebmpapst.com

AC centrifugal fan

backward curved

with housing and angle bracket

Charts: Air flow 50 Hz

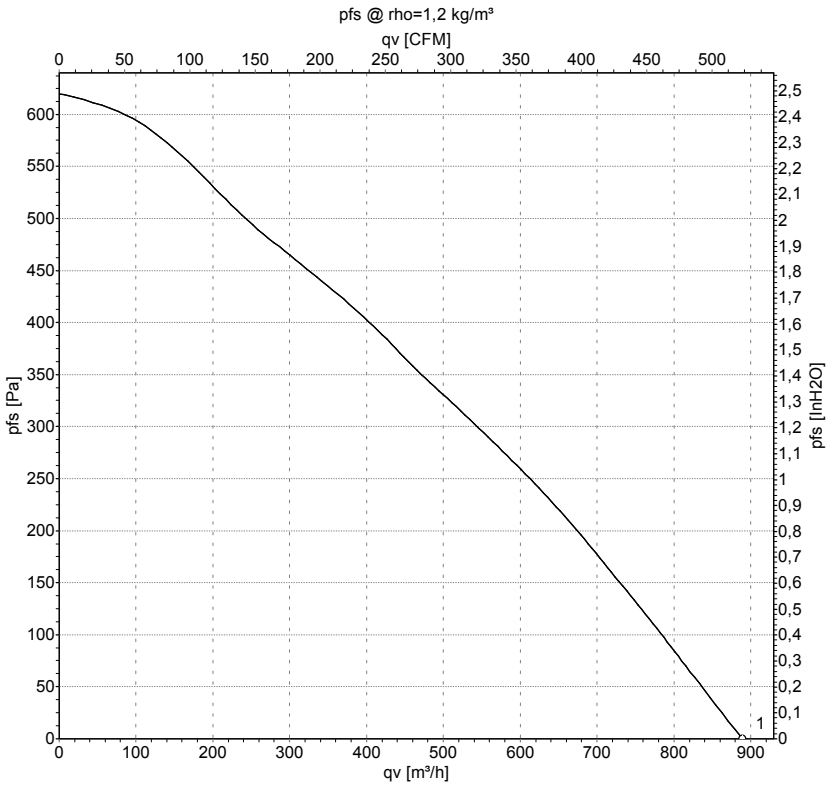

Measurement: LU-140928

Air performance measured as per ISO 5801 Installation category A. For detailed information on the measuring set-up, please contact ebm-papst. Suction-side noise levels: LwA measured as per ISO 13347 / LpA measured with 1m distance to fan axis. The values given are valid under the measuring conditions mentioned above and may vary according to the actual installation situation. With any deviation from the standard set-up, the specific values have to be checked and reviewed with the unit installed.

Measured values

	U	f	n	P_e	I	qv
	V	Hz	min^{-1}	W	A	m^3/h
1	230	50	2550	145	0.64	890

U = Supply voltage · f = Frequency · n = Speed · P_e = Power input · I = Current draw · qv = Air flow

ebm-papst Mulfingen GmbH & Co. KG · Bachmühle 2 · D-74673 Mulfingen · Phone +49 (0) 7938 81-0 · Fax +49 (0) 7938 81-110 · info1@de.ebmpapst.com · www.ebmpapst.com

AC centrifugal fan

backward curved

with housing and angle bracket

Charts: Air flow 60 Hz

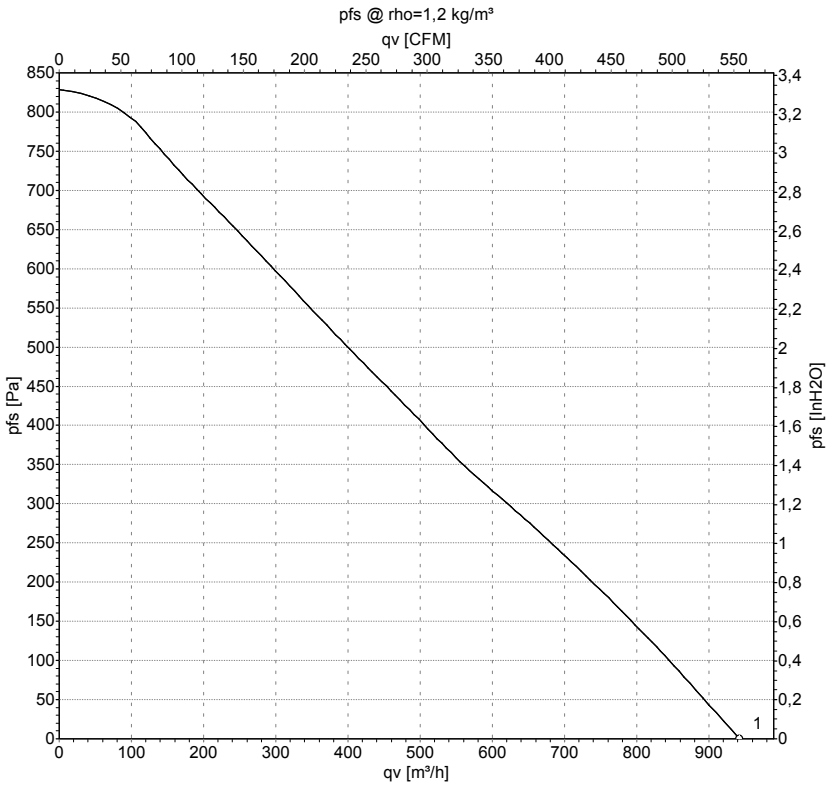

Measurement: LU-140931

Air performance measured as per ISO 5801 Installation category A. For detailed information on the measuring set-up, please contact ebm-papst. Suction-side noise levels: LwA measured as per ISO 13347 / LpA measured with 1m distance to fan axis. The values given are valid under the measuring conditions mentioned above and may vary according to the actual installation situation. With any deviation from the standard set-up, the specific values have to be checked and reviewed with the unit installed.

Measured values

	U	f	n	P_e	I	qv
	V	Hz	min^{-1}	W	A	m^3/h
1	230	60	2700	200	0.88	945

U = Supply voltage · f = Frequency · n = Speed · P_e = Power input · I = Current draw · qv = Air flow

ebm-papst Mulfingen GmbH & Co. KG · Bachmühle 2 · D-74673 Mulfingen · Phone +49 (0) 7938 81-0 · Fax +49 (0) 7938 81-110 · info1@de.ebmpapst.com · www.ebmpapst.com