K2E225-RC92-09

AC centrifugal fan - RadiCal

backward curved, single inlet

with housing (flange)

ebm-papst Mulfingen GmbH & Co. KG
Bachmühle 2 · D-74673 Mulfingen
Phone +49 7938 81-0
Fax +49 7938 81-110
info1@de.ebmpapst.com
www.ebmpapst.com

Limited partnership · Headquarters Mulfingen
County court Stuttgart · HRA 590344

General partner Elektrobau Mulfingen GmbH · Headquarters Mulfingen
County court Stuttgart · HRB 590142

ErP2015 EXCEEDS THE NORM

Nominal data

Type	**K2E225-RC92-09**
Motor	**M2E068-DF**

Phase		1~	1~	1~
Nominal voltage	VAC	230	230	230
Frequency	Hz	50	60	60
Type of data definition		ml	ml	ml
Valid for approval / standard		CE	CE	UL 2111
Speed	min^{-1}	2550	2720	2720
Power input	W	145	205	220
Current draw	A	0.64	0.9	0.93
Motor capacitor	µF	3.5	3.5	3.5
Capacitor voltage	VDB	450	450	450
Capacitor standard		P0 (CE)	P0 (CE)	UL
Min. back pressure	Pa	0	0	0
Min. ambient temperature	°C	-25	-25	-25
Max. ambient temperature	°C	60	60	60
Starting current	A	1.25	1.2	1.25

ml = Max. load · me = Max. efficiency · fa = Running at free air · cs = Customer specs · cu = Customer unit
Subject to alterations

Data according to ErP directive

Installation category	A
Efficiency category	Static
Variable speed drive	No
Specific ratio*	1.00

* Specific ratio = 1 + p_{fs} / 100 000 Pa

		Actual	Request 2015
Overall efficiency η_{es}	%	42.5	42.5
Efficiency grade N		62	62
Power input P_e	kW	0.14	
Air flow q_v	m^3/h	705	
Pressure increase p_{fs}	Pa	320	
Speed n	min^{-1}	2560	

Data definition with optimum efficiency. LU-127147
The ErP data is determined using a motor-impeller combination in a standardised measurement configuration.

AC centrifugal fan - RadiCal

backward curved, single inlet

with housing (flange)

Technical features

Mass	4.6 kg
Size	225 mm
Surface of rotor	Coated in black
Material of impeller	PA plastic
Housing material	PA plastic
Number of blades	7
Direction of rotation	Clockwise, seen on rotor
Type of protection	IP 44; Depending on installation and position as per EN 60034-5
Insulation class	"B"
Humidity class	F2-2
Max. permissible ambient motor temp. (transp./ storage)	+ 80 °C
Min. permissible ambient motor temp. (transp./storage)	- 40 °C
Mounting position	Shaft horizontal or rotor on bottom; rotor on top on request
Condensate discharge holes	Rotor-side
Operation mode	S1
Motor bearing	Ball bearing
Touch current acc. IEC 60990 (measuring network Fig. 4, TN system)	< 0.75 mA
Motor protection	Thermal overload protector (TOP) wired internally
Protection class	I (if protective earth is connected by customer)
Product conforming to standard	EN 60335-1; CE
Approval	CCC; UL 507; CSA C22.2 Nr.113

ebm-papst Mulfingen GmbH & Co. KG · Bachmühle 2 · D-74673 Mulfingen · Phone +49 (0) 7938 81-0 · Fax +49 (0) 7938 81-110 · info1@de.ebmpapst.com · www.ebmpapst.com

AC centrifugal fan - RadiCal

backward curved, single inlet

with housing (flange)

Product drawing

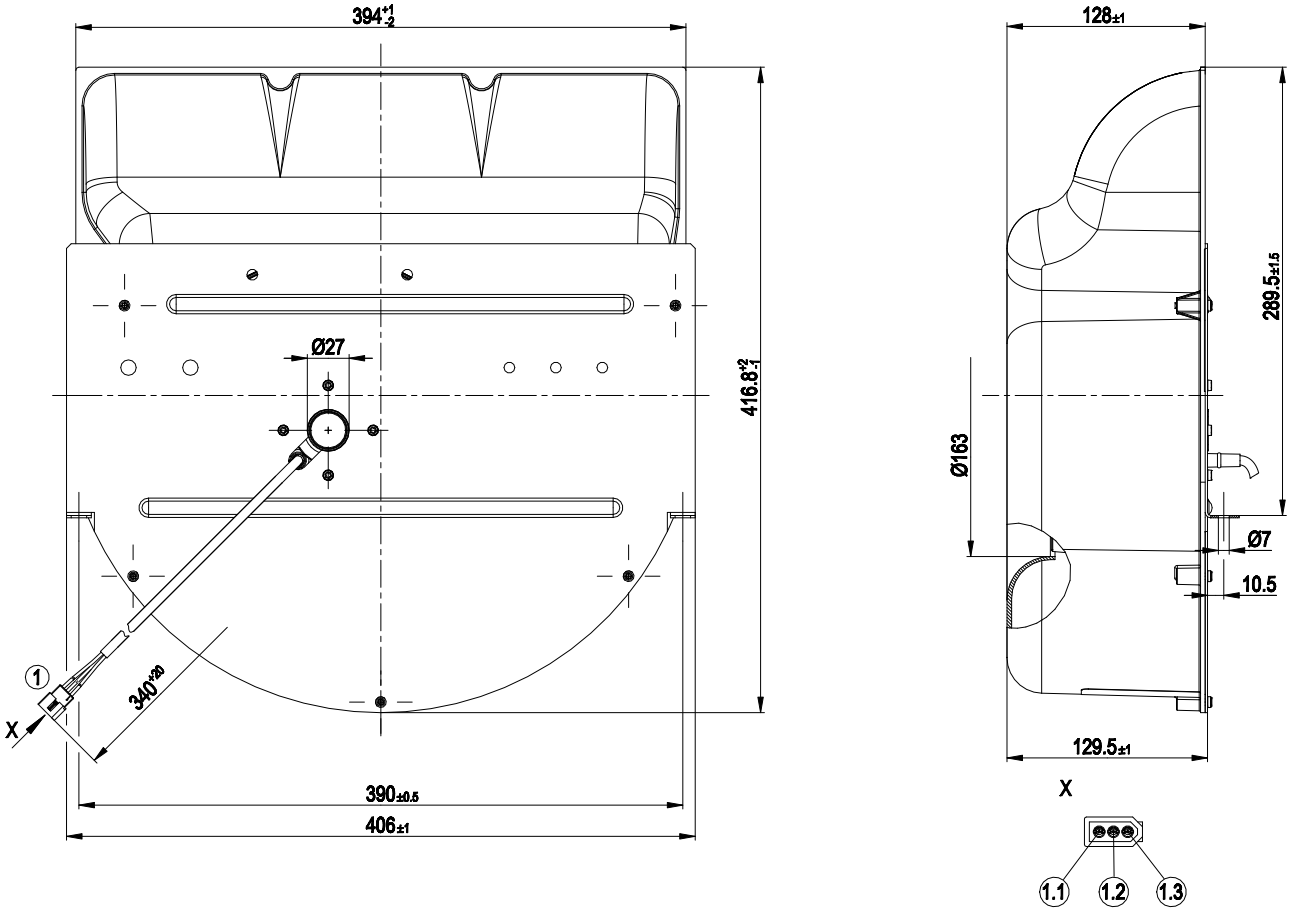

1	Connection line PFA AWG20, Connector shell Molex 03-06-2032 and 3x plug pin Molex 02-06-2101 crimped
1.1	brown
1.2	black
1.3	blue

Connection screen

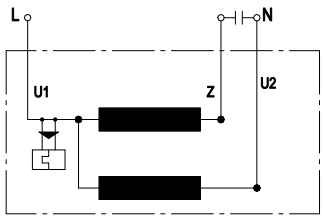

U1	Blue	Z	brown	U2	black

ebm-papst Mulfingen GmbH & Co. KG · Bachmühle 2 · D-74673 Mulfingen · Phone +49 (0) 7938 81-0 · Fax +49 (0) 7938 81-110 · info1@de.ebmpapst.com · www.ebmpapst.com

AC centrifugal fan - RadiCal

backward curved, single inlet

with housing (flange)

Charts: Air flow 50 Hz

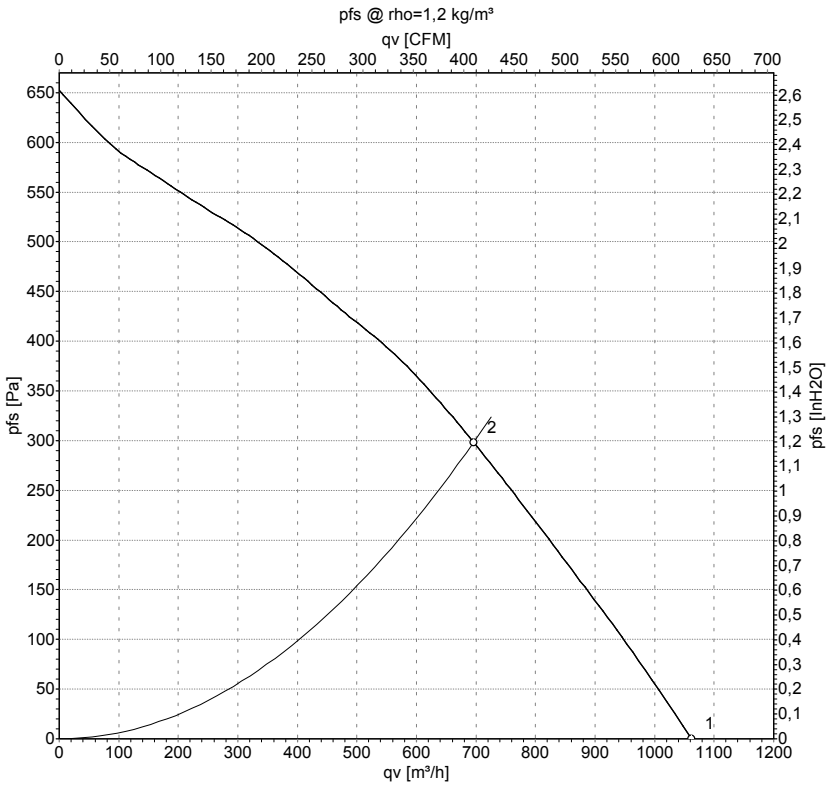

Measurement: LU-140831

Air performance measured as per ISO 5801 Installation category A. For detailed information on the measuring set-up, please contact ebm-papst. Suction-side noise levels: LwA measured as per ISO 13347 / LpA measured with 1m distance to fan axis. The values given are valid under the measuring conditions mentioned above and may vary according to the actual installation situation. With any deviation from the standard set-up, the specific values have to be checked and reviewed with the unit installed.

Measured values

	U	f	n	P_e	I	qv	p_{fs}
	V	Hz	min^{-1}	W	A	m^3/h	Pa
1	230	50	2645	127	0.56	1060	0
2	230	50	2550	145	0.64	695	300

U = Supply voltage · f = Frequency · n = Speed · P_e = Power input · I = Current draw · qv = Air flow · p_{fs} = Pressure increase

ebm-papst Mulfingen GmbH & Co. KG · Bachmühle 2 · D-74673 Mulfingen · Phone +49 (0) 7938 81-0 · Fax +49 (0) 7938 81-110 · info1@de.ebmpapst.com · www.ebmpapst.com

AC centrifugal fan - RadiCal

backward curved, single inlet

with housing (flange)

Charts: Air flow 60 Hz

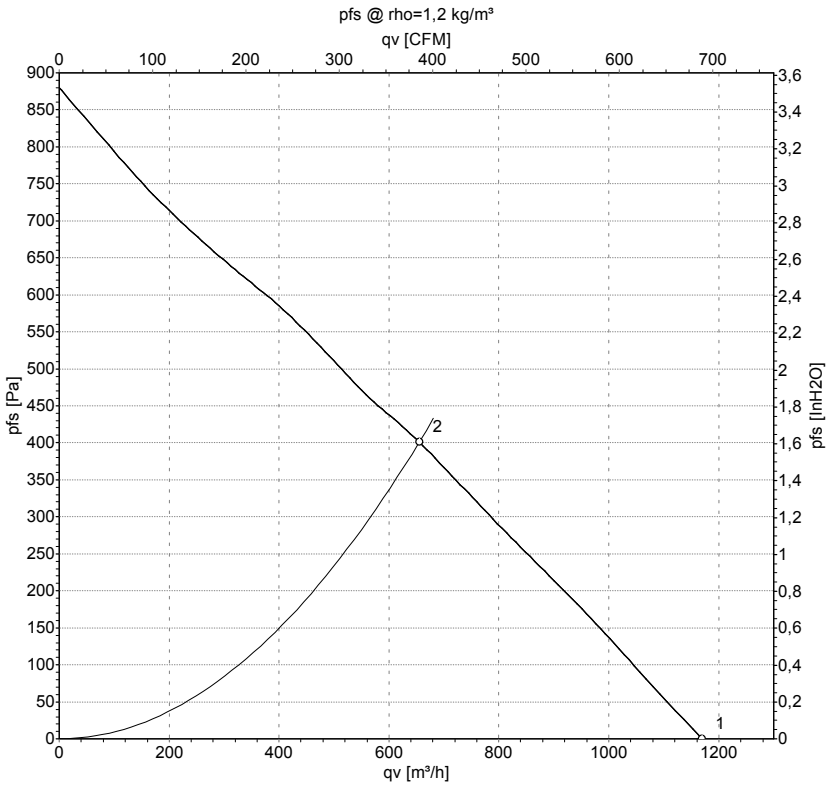

Measurement: LU-140835

Air performance measured as per ISO 5801 Installation category A. For detailed information on the measuring set-up, please contact ebm-papst. Suction-side noise levels: LwA measured as per ISO 13347 / LpA measured with 1m distance to fan axis. The values given are valid under the measuring conditions mentioned above and may vary according to the actual installation situation. With any deviation from the standard set-up, the specific values have to be checked and reviewed with the unit installed.

Measured values

	U	f	n	P_e	I	qv	p_{fs}
	V	Hz	min^{-1}	W	A	m^3/h	Pa
1	230	60	2910	179	0.79	1170	0
2	230	60	2720	205	0.90	655	400

U = Supply voltage · f = Frequency · n = Speed · P_e = Power input · I = Current draw · qv = Air flow · p_{fs} = Pressure increase

ebm-papst Mulfingen GmbH & Co. KG · Bachmühle 2 · D-74673 Mulfingen · Phone +49 (0) 7938 81-0 · Fax +49 (0) 7938 81-110 · info1@de.ebmpapst.com · www.ebmpapst.com