S2D250-BI02-01

AC axial fan

sickled blades (S series)

with guard grille for full nozzle

ebm-papst Mulfingen GmbH & Co. KG
Bachmühle 2 · D-74673 Mulfingen
Phone +49 7938 81-0
Fax +49 7938 81-110
info1@de.ebmpapst.com
www.ebmpapst.com

Limited partnership · Headquarters Mulfingen
County court Stuttgart · HRA 590344

General partner Elektrobau Mulfingen GmbH · Headquarters Mulfingen
County court Stuttgart · HRB 590142

Nominal data

Type	**S2D250-BI02-01**
Motor	**M2D068-CF**

Phase		3~	3~	3~	3~
Nominal voltage	VAC	230	230	400	400
Connection		Δ	Δ	Y	Y
Frequency	Hz	50	60	50	60
Type of data definition		fa	fa	fa	fa
Valid for approval / standard		CE	CE	CE	CE
Speed	min^{-1}	2500	2650	2500	2650
Power input	W	100	140	100	140
Current draw	A	0.35	0.4	0.20	0.23
Max. back pressure	Pa	150	150	150	150
Min. ambient temperature	°C	-25	-25	-25	-25
Max. ambient temperature	°C	65	45	65	45
Starting current	A	0.82	0.77	0.47	0.44

ml = Max. load · me = Max. efficiency · fa = Running at free air · cs = Customer specs · cu = Customer unit
Subject to alterations

AC axial fan

sickled blades (S series)

with guard grille for full nozzle

Technical features

Mass	2.1 kg
Size	250 mm
Surface of rotor	Coated in black
Material of blades	Sheet steel, coated in black
Material of guard grille	Steel, phosphated and coated in black plastic
Number of blades	7
Direction of air flow	"A"
Direction of rotation	Counter-clockwise, seen on rotor
Type of protection	IP 44
Insulation class	"B"
Humidity class	F1-2
Max. permissible ambient motor temp. (transp./ storage)	+ 80 °C
Min. permissible ambient motor temp. (transp./storage)	- 40 °C
Mounting position	Shaft horizontal or rotor on bottom; rotor on top on request
Condensate discharge holes	Rotor-side
Operation mode	S1
Motor bearing	Ball bearing
Touch current acc. IEC 60990 (measuring network Fig. 4, TN system)	< 0.75 mA
Cable exit	Lateral
Protection class	I (if protective earth is connected by customer)
Product conforming to standard	EN 60335-1; CE
Approval	EAC; CCC

ebm-papst Mulfingen GmbH & Co. KG · Bachmühle 2 · D-74673 Mulfingen · Phone +49 (0) 7938 81-0 · Fax +49 (0) 7938 81-110 · info1@de.ebmpapst.com · www.ebmpapst.com

AC axial fan

sickled blades (S series)

with guard grille for full nozzle

Product drawing

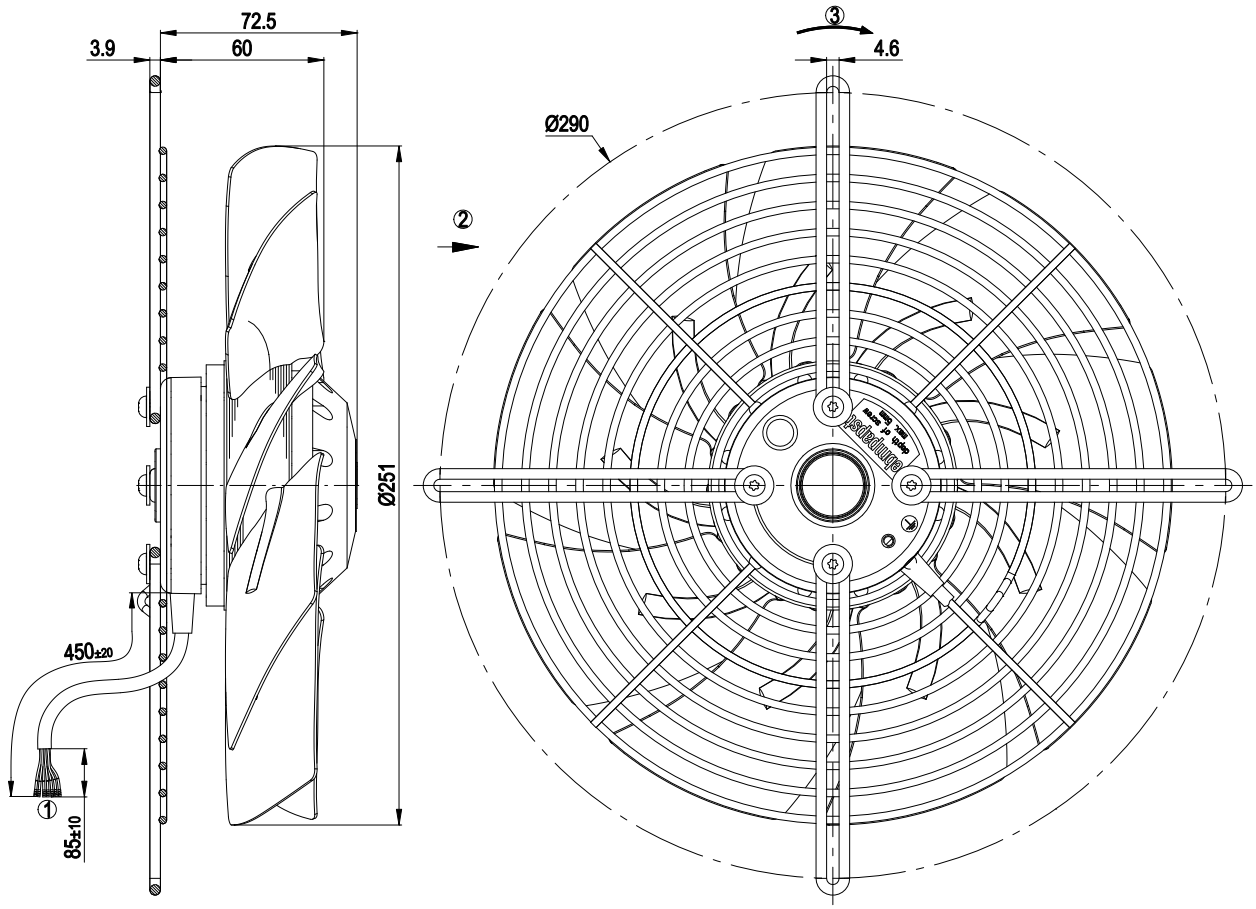

1	Connection line PVC, 7x brass lead tips crimped
2	Direction of air flow "A"
3	Direction of rotation counter-clockwise, seen on rotor

ebm-papst Mulfingen GmbH & Co. KG · Bachmühle 2 · D-74673 Mulfingen · Phone +49 (0) 7938 81-0 · Fax +49 (0) 7938 81-110 · info1@de.ebmpapst.com · www.ebmpapst.com

AC axial fan

sickled blades (S series)

with guard grille for full nozzle

Connection screen

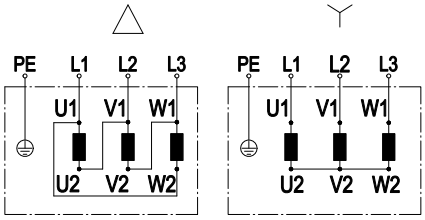

Change direction of rotation by reversing two phases

	Three-phase motor	Δ	Delta connection	Y	Star connection
L1	= U1 = black	L2	= V1 = blue	L3	= W1 = brown
U2	green	V2	white	W2	yellow
PE	green/yellow				

ebm-papst Mulfingen GmbH & Co. KG · Bachmühle 2 · D-74673 Mulfingen · Phone +49 (0) 7938 81-0 · Fax +49 (0) 7938 81-110 · info1@de.ebmpapst.com · www.ebmpapst.com

AC axial fan

sickled blades (S series)

with guard grille for full nozzle

Charts: Air flow 50 Hz

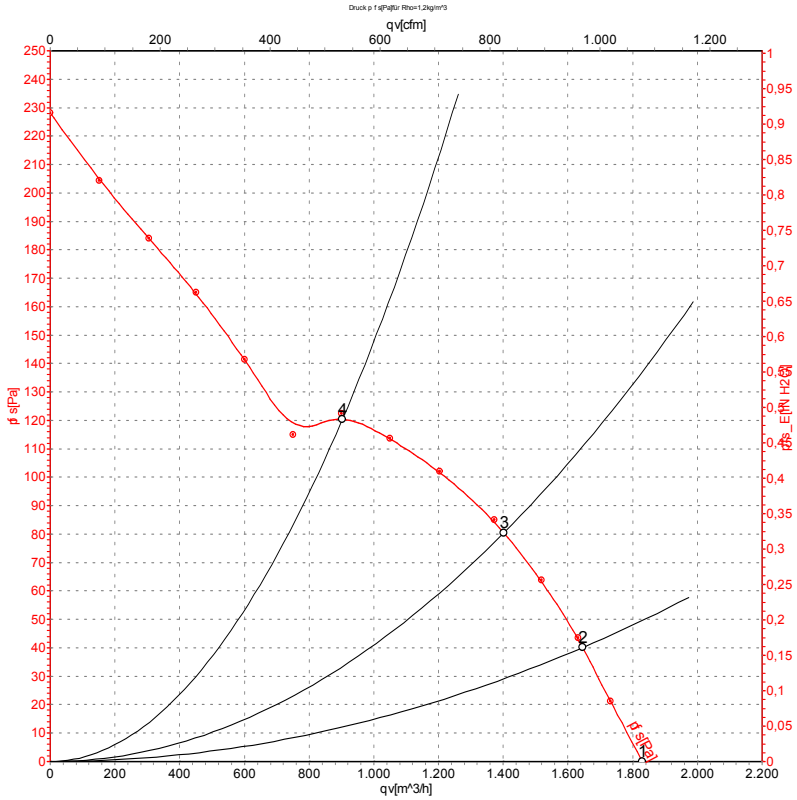

Measurement: LU-59965

Air performance measured as per ISO 5801 Installation category A. For detailed information on the measuring set-up, please contact ebm-papst. Suction-side noise levels: LwA measured as per ISO 13347 / LpA measured with 1m distance to fan axis. The values given are valid under the measuring conditions mentioned above and may vary according to the actual installation situation. With any deviation from the standard set-up, the specific values have to be checked and reviewed with the unit installed.

Measured values

	U	f	n	P_e	I	qv	p_{fs}
	V	Hz	min^{-1}	W	A	m^3/h	Pa
1	400	50	2500	100	0.20	1830	0
2	400	50	2425	111	0.21	1645	40
3	400	50	2360	120	0.21	1400	80
4	400	50	2310	127	0.22	905	122

U = Supply voltage · f = Frequency · n = Speed · P_e = Power input · I = Current draw · qv = Air flow · p_{fs} = Pressure increase

ebm-papst Mulfingen GmbH & Co. KG · Bachmühle 2 · D-74673 Mulfingen · Phone +49 (0) 7938 81-0 · Fax +49 (0) 7938 81-110 · info1@de.ebmpapst.com · www.ebmpapst.com

AC axial fan

sickled blades (S series)

with guard grille for full nozzle

Charts: Air flow 60 Hz

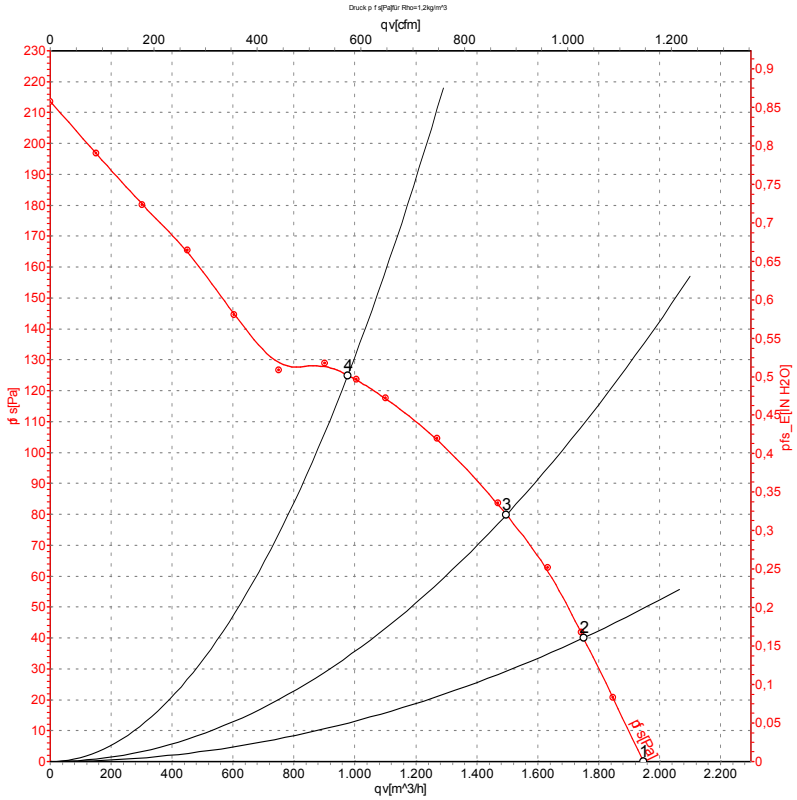

Measurement: LU-59966

Air performance measured as per ISO 5801 Installation category A. For detailed information on the measuring set-up, please contact ebm-papst. Suction-side noise levels: LwA measured as per ISO 13347 / LpA measured with 1m distance to fan axis. The values given are valid under the measuring conditions mentioned above and may vary according to the actual installation situation. With any deviation from the standard set-up, the specific values have to be checked and reviewed with the unit installed.

Measured values

	U	f	n	P_e	I	qv	p_{fs}
	V	Hz	min^{-1}	W	A	m^3/h	Pa
1	400	60	2650	140	0.23	1950	0
2	400	60	2545	148	0.24	1750	40
3	400	60	2450	158	0.25	1495	80
4	400	60	2350	166	0.26	975	125

U = Supply voltage · f = Frequency · n = Speed · P_e = Power input · I = Current draw · qv = Air flow · p_{fs} = Pressure increase

ebm-papst Mulfingen GmbH & Co. KG · Bachmühle 2 · D-74673 Mulfingen · Phone +49 (0) 7938 81-0 · Fax +49 (0) 7938 81-110 · info1@de.ebmpapst.com · www.ebmpapst.com