W1G172-EC87-18

EC axial fan

sickled blades (S series), single inlet

ESM wall ring

ebm-papst Mulfingen GmbH & Co. KG
Bachmühle 2 · D-74673 Mulfingen
Phone +49 7938 81-0
Fax +49 7938 81-110
info1@de.ebmpapst.com
www.ebmpapst.com

Limited partnership · Headquarters Mulfingen
County court Stuttgart · HRA 590344

General partner Elektrobau Mulfingen GmbH · Headquarters Mulfingen
County court Stuttgart · HRB 590142

Nominal data

Type	**W1G172-EC87-18**		
Motor	**M1G055-BD**		
Phase		1~	1~
Nominal voltage	VAC	230	230
Type of data definition		ml	
State			prelim.
Speed	min^{-1}	1300	700
Power input	W	5	
Current draw	A	0.05	
Max. back pressure	Pa	14	
Min. ambient temperature	°C	-30	-30
Max. ambient temperature	°C	50	50

ml = Max. load · me = Max. efficiency · fa = Running at free air · cs = Customer specs · cu = Customer unit
Subject to alterations

EC axial fan

sickled blades (S series), single inlet

ESM wall ring

Technical features

Mass	0.9 kg
Size	172 mm
Material of blades	PA plastic
Material of wall ring	PP plastic
Number of blades	5
Direction of air flow	"V"
Direction of rotation	Counter-clockwise, seen on rotor
Type of protection	IP 54
Insulation class	"B"
Humidity class	F3-1
Max. permissible ambient motor temp. (transp./ storage)	+ 70 °C
Min. permissible ambient motor temp. (transp./storage)	- 40 °C
Mounting position	Any
Condensate discharge holes	None
Operation mode	S1
Motor bearing	Ball bearing with anti-freezing grease
Technical features	- Speed adjustment input (230 V) - ESM+ extensible with plug-in module - Soft start - Over-temperature protected motor
EMC interference immunity	Acc. to EN 61000-6-2 (industrial environment)
EMC harmonics	Acc. to EN 61000-3-2/3
EMC interference emission	Acc. to EN 61000-6-3 (household environment)
Motor protection	Thermal overload protector (TOP) wired internally
Cable exit	Lateral
Protection class	II
Product conforming to standard	EN 60335-1; CE
Approval	EAC; VDE; UL 2111; CSA C22.2 Nr.77

ebm-papst Mulfingen GmbH & Co. KG · Bachmühle 2 · D-74673 Mulfingen · Phone +49 (0) 7938 81-0 · Fax +49 (0) 7938 81-110 · info1@de.ebmpapst.com · www.ebmpapst.com

EC axial fan

sickled blades (S series), single inlet

ESM wall ring

Product drawing

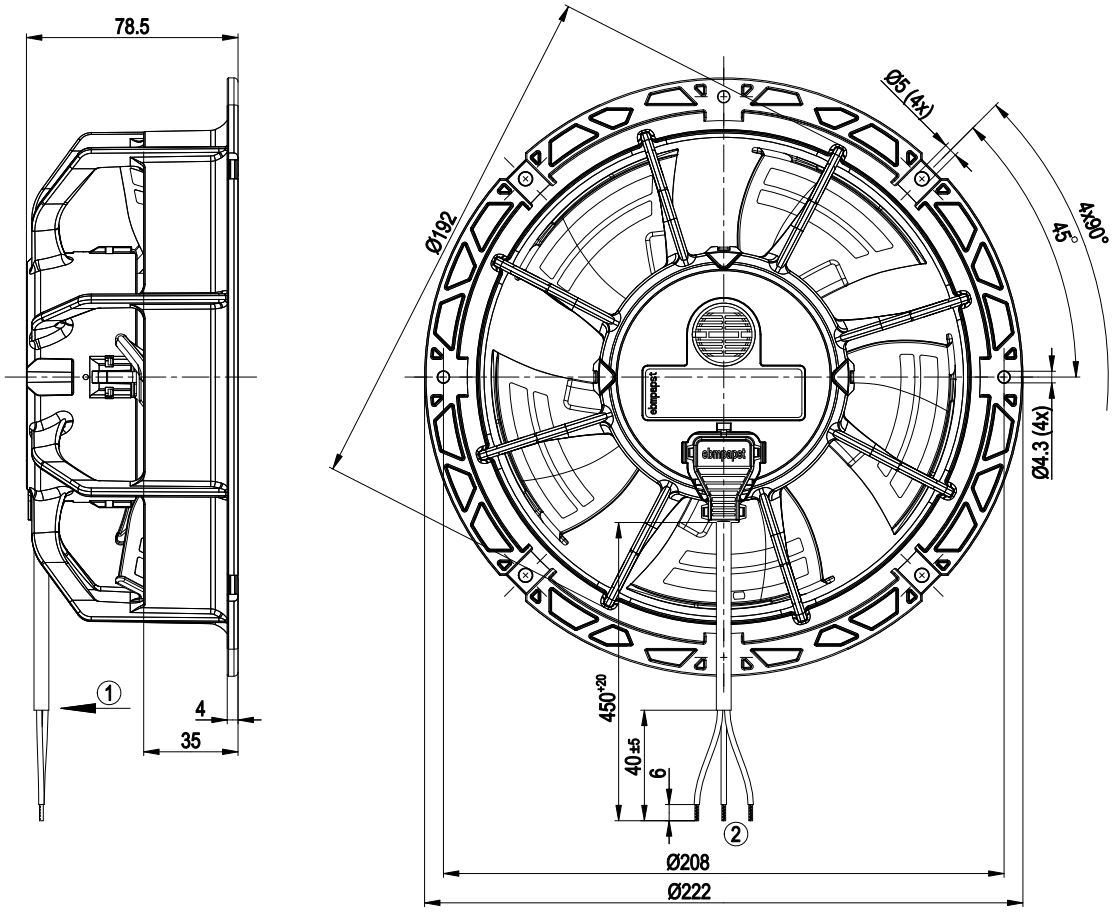

1	Direction of air flow "V"
2	Connection line PVC AWG20, 3x lead tips crimped

Connection screen

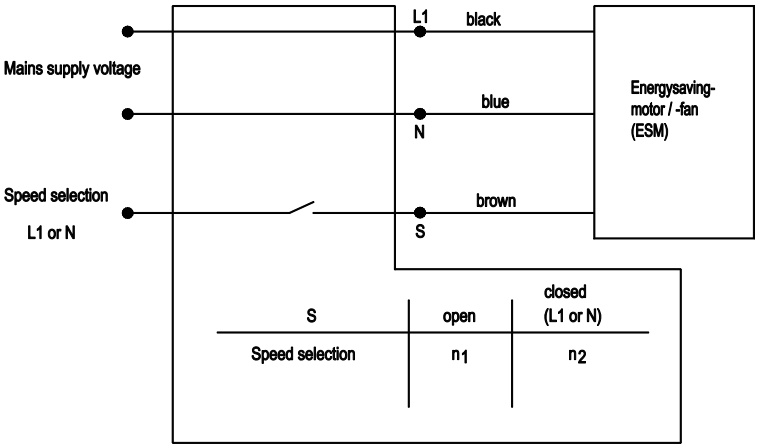

ebm-papst Mulfingen GmbH & Co. KG · Bachmühle 2 · D-74673 Mulfingen · Phone +49 (0) 7938 81-0 · Fax +49 (0) 7938 81-110 · info1@de.ebmpapst.com · www.ebmpapst.com

EC axial fan

sickled blades (S series), single inlet

ESM wall ring

Charts: Air flow 50 Hz

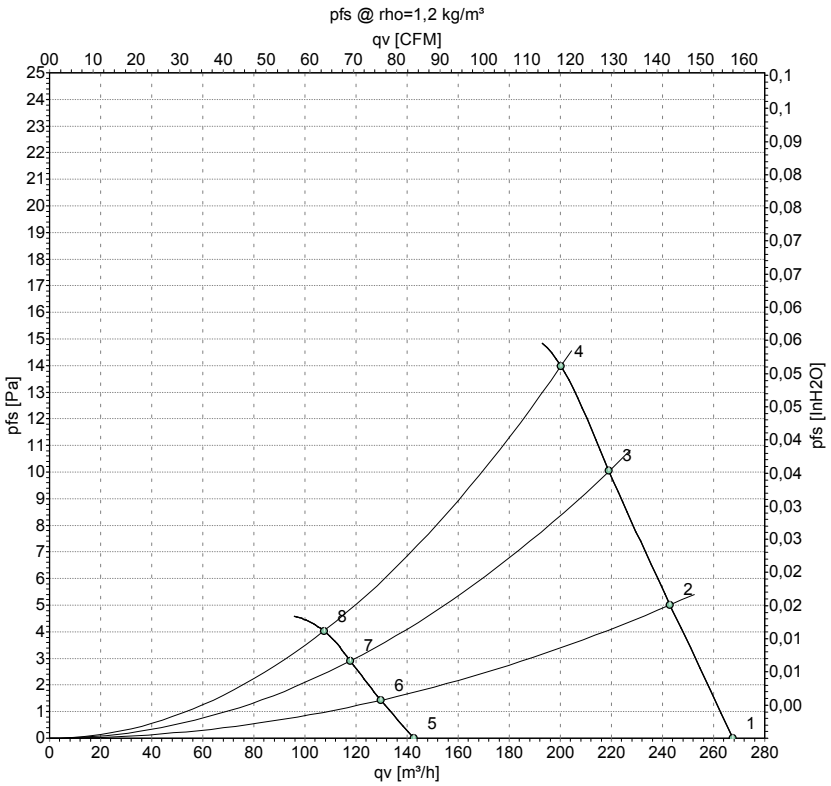

Measurement: LU-157687
Measurement: LU-157688

Air performance measured as per ISO 5801 Installation category A. For detailed information on the measuring set-up, please contact ebm-papst. Suction-side noise levels: LwA measured as per ISO 13347 / LpA measured with 1m distance to fan axis. The values given are valid under the measuring conditions mentioned above and may vary according to the actual installation situation. With any deviation from the standard set-up, the specific values have to be checked and reviewed with the unit installed.

Measured values

	U	f	n	P_{ed}	I	qv	p_{fs}
	V	Hz	min^{-1}	W	A	m^3/h	Pa
1	230	50	1300	5.0	0.05	270	0
2	230	50	1300	5.0	0.05	245	5
3	230	50	1300	5.0	0.05	220	10
4	230	50	1300	5.0	0.05	200	14
5	230	50	700	2.00	0.03	145	0
6	230	50	700	2.00	0.03	130	1
7	230	50	700	2.00	0.03	120	3
8	230	50	700	2.00	0.03	105	4

U = Supply voltage · f = Frequency · n = Speed · P_{ed} = Power input · I = Current draw · qv = Air flow · p_{fs} = Pressure increase

ebm-papst Mulfingen GmbH & Co. KG · Bachmühle 2 · D-74673 Mulfingen · Phone +49 (0) 7938 81-0 · Fax +49 (0) 7938 81-110 · info1@de.ebmpapst.com · www.ebmpapst.com