W3G280-EQ20-43

EC axial fan

with brushless DC motor

Automotive



ebm-papst Mulfingen GmbH & Co. KG
Bachmühle 2 · D-74673 Mulfingen
Phone +49 7938 81-0
Fax +49 7938 81-110
info1@de.ebmpapst.com
www.ebmpapst.com

Limited partnership · Headquarters Mulfingen
County court Stuttgart · HRA 590344

General partner Elektrobau Mulfingen GmbH · Headquarters Mulfingen
County court Stuttgart · HRB 590142

ErP2015 EXCEEDS THE NORM

Nominal data

Type	**W3G280-EQ20-43**	
Motor	**M3G074-CF**	
Nominal voltage	VDC	26
Type of data definition		fa
Speed	min^{-1}	3100
Power input	W	200
Current draw	A	7.5
Min. ambient temperature	°C	-40
Max. ambient temperature	°C	85

ml = Max. load · me = Max. efficiency · fa = Running at free air · cs = Customer specs · cu = Customer unit
Subject to alterations

Data according to ErP directive

Installation category	A
Efficiency category	Static
Variable speed drive	Yes
Specific ratio*	1.00

* Specific ratio = 1 + p_{fs} / 100 000 Pa

		Actual	Request 2015
Overall efficiency η_{es}	%	41	29.1
Efficiency grade N		51.9	40
Power input P_e	kW	0.19	
Air flow q_v	m^3/h	1355	
Pressure increase p_{fs}	Pa	189	
Speed n	min^{-1}	3085	

Data definition with optimum efficiency. LU-66886
The ErP data is determined using a motor-impeller combination in a standardised measurement configuration.

ebmpapst

EC axial fan

with brushless DC motor

Automotive

Technical features

Mass	2.4 kg
Size	280 mm
Material of impeller	PBT plastic
Material of wall ring	PP plastic
Number of blades	5
Direction of air flow	"V"
Balance quality according to DIN ISO 1940-1	G 10
Direction of rotation	Clockwise, seen on rotor
Type of protection	IP 24 KM
Insulation class	"B"
Humidity class	F3-2
Max. permissible ambient motor temp. (transp./ storage)	+85 °C
Min. permissible ambient motor temp. (transp./storage)	-40 °C
Mounting position	Any
Condensate discharge holes	None, open rotor
Operation mode	S1
Motor bearing	Ball bearing; (sealed)
Life expectancies	25,000 h (typical)
Technical features	- Lowering input - Tach output - Fault output (high-side switch max. 30 mA) - INVLIN (control input, inverse linear) -Load dump (58 V) - Motor current limit - Soft start - Control input 0-10 VDC / PWM - Overvoltage detection - Over-temperature protected electronics - Line undervoltage detection
EMC directives	According to ECE R10 Rev. 3
Electrical leads	With plug; Standby current less than 500 µA
Motor protection	Reverse polarity and locked-rotor protection
Cable exit	Lateral
Approval	EAC; E1
Noise level	79 dB(A), sound power level according to ISO 13347
Remark	Type approval number – 035492

ebm-papst Mulfingen GmbH & Co. KG · Bachmühle 2 · D-74673 Mulfingen · Phone +49 (0) 7938 81-0 · Fax +49 (0) 7938 81-110 · info1@de.ebmpapst.com · www.ebmpapst.com

EC axial fan

with brushless DC motor

Automotive

Product drawing

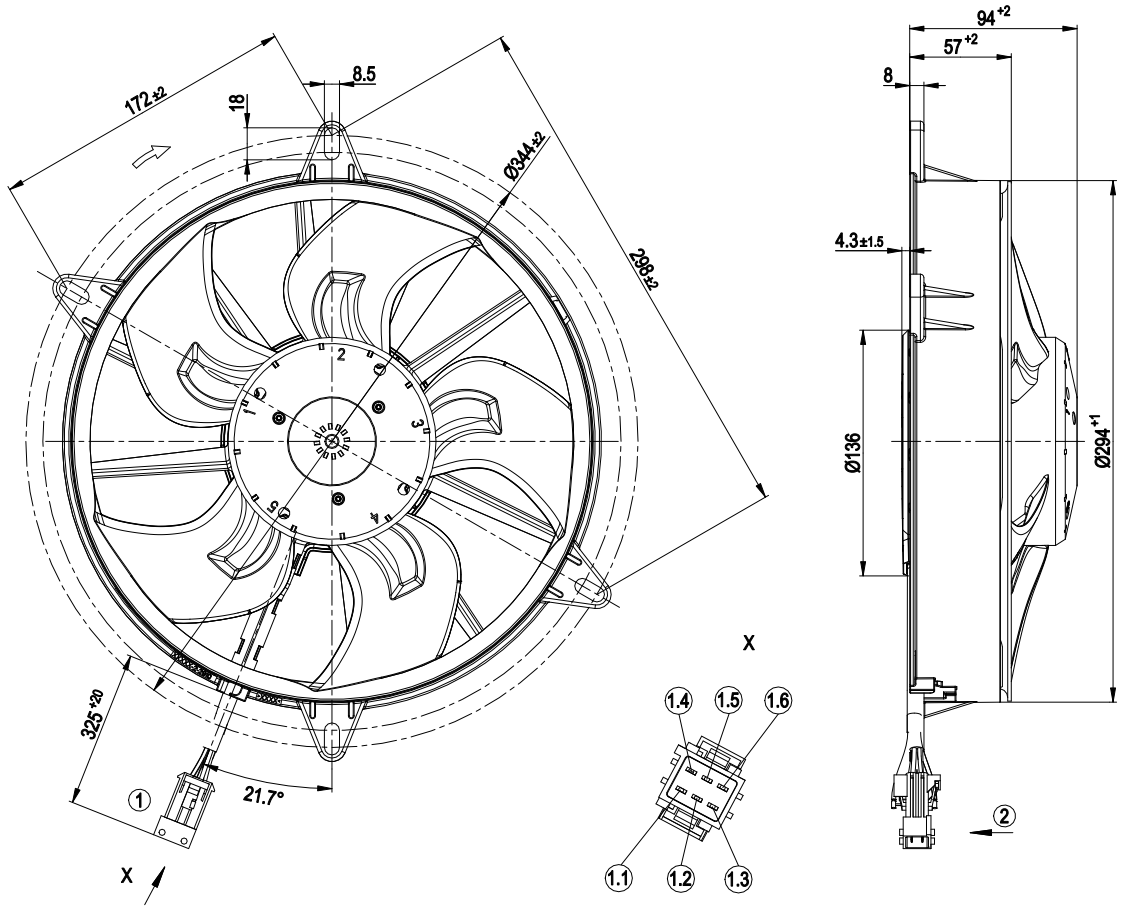

1	Connection line with plug tyco Junior Power Timer 1-962349-1, 6-pole, coded
	Connection line (460 mm) with mating connector part no. 02002-4-1021 not included in scope of delivery
1.1	+ UB (black)
1.2	GND (brown)
1.3	PWM/LIN (yellow)
1.4	INVLIN (orange)
1.5	ABSENK (blue)
1.6	Diagnostic output (white)
2	Direction of air flow "V"

ebm-papst Mulfingen GmbH & Co. KG · Bachmühle 2 · D-74673 Mulfingen · Phone +49 (0) 7938 81-0 · Fax +49 (0) 7938 81-110 · info1@de.ebmpapst.com · www.ebmpapst.com

EC axial fan

with brushless DC motor

Automotive

Connection screen

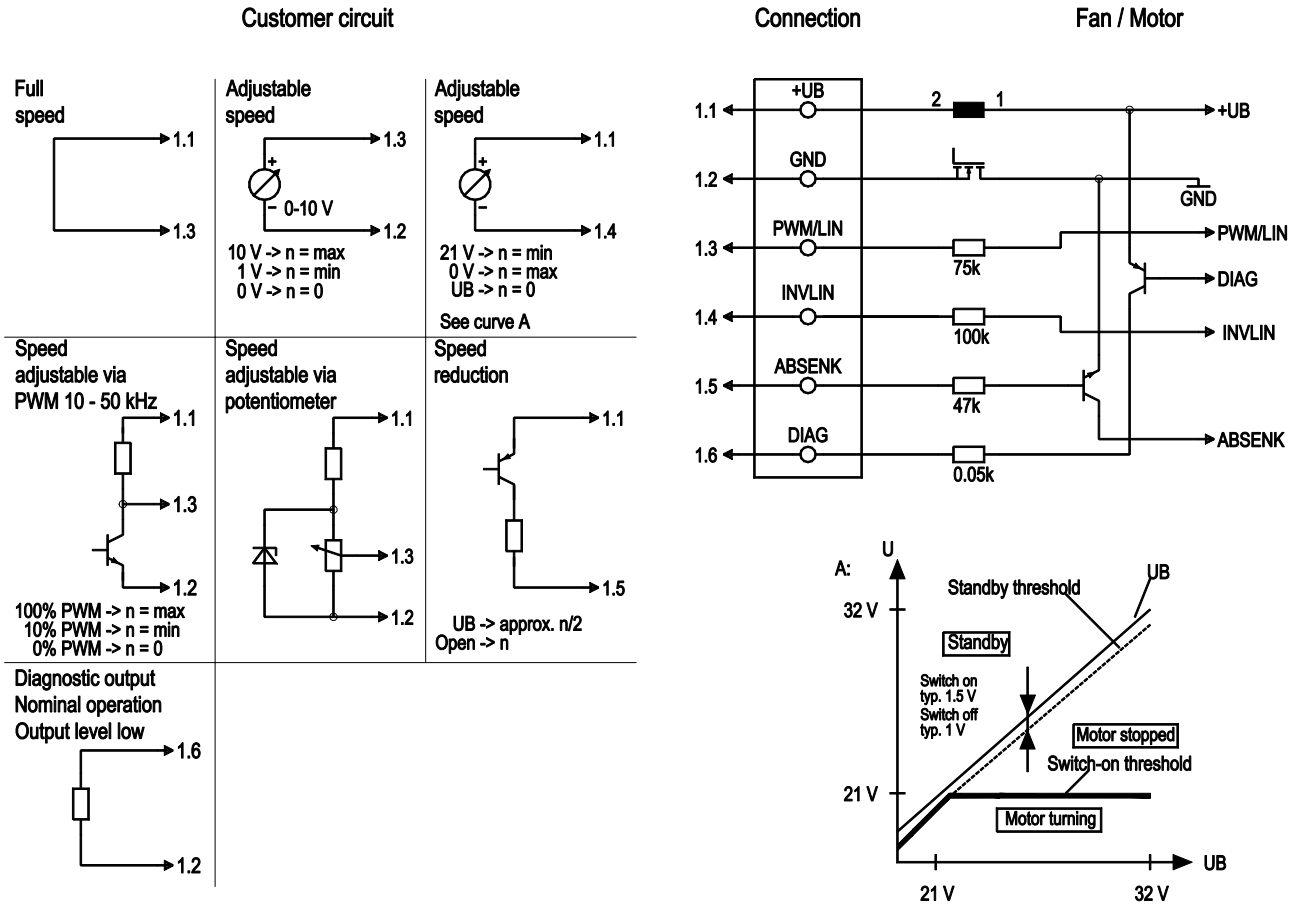

No.	Conn.	Designation	Function / assignment
	1.1	+UB	Power supply
	1.2	GND	Power supply GND, reference earth
	1.3	PWM/LIN	Analogue voltage control input 0-10 V or PWM
	1.4	INVLIN	Control input, inverse linear
	1.5	ABSENK	Lowering input
	1.6	DIAG	Diagnostic output

ebm-papst Mulfingen GmbH & Co. KG · Bachmühle 2 · D-74673 Mulfingen · Phone +49 (0) 7938 81-0 · Fax +49 (0) 7938 81-110 · info1@de.ebmpapst.com · www.ebmpapst.com

EC axial fan

with brushless DC motor

Automotive

Charts: Air flow

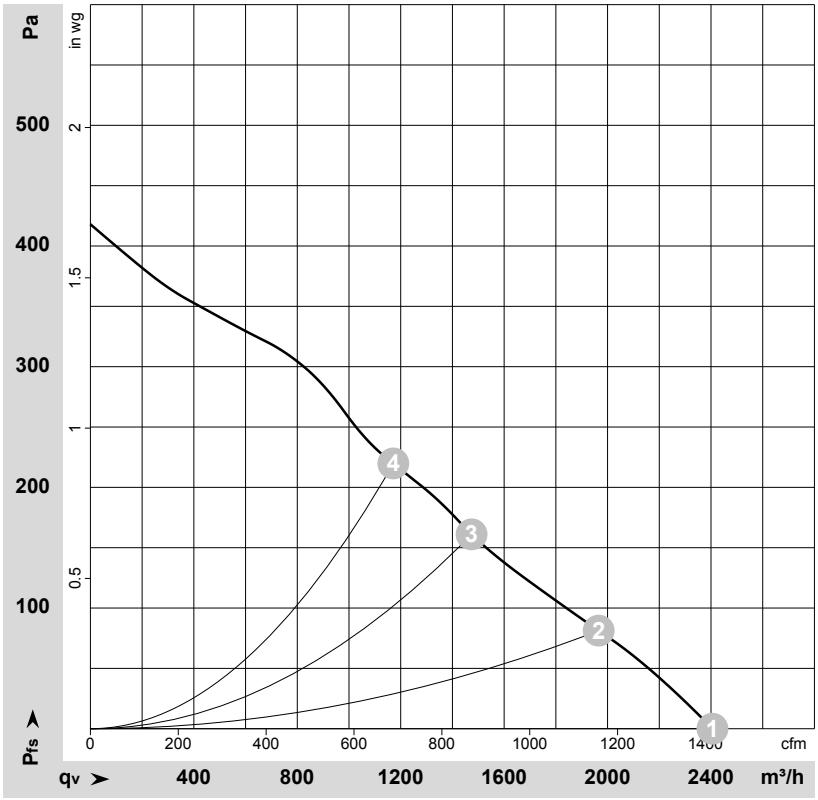

ρ = 1,15 kg/m³ ± 2%

Measurement: LU-66886

Air performance measured as per ISO 5801 Installation category A. For detailed information on the measuring set-up, please contact ebm-papst. Suction-side noise levels: LwA measured as per ISO 13347 / LpA measured with 1m distance to fan axis. The values given are valid under the measuring conditions mentioned above and may vary according to the actual installation situation. With any deviation from the standard set-up, the specific values have to be checked and reviewed with the unit installed.

Measured values

	U	n	P_{ed}	I	qv	p_{fs}
	V	min^{-1}	W	A	m^3/h	Pa
1	26	3100	200	7.50	2405	0
2	26	3095	200	7.50	1965	80
3	26	3085	192	7.35	1475	160
4	26	3105	214	8.22	1170	220

U = Supply voltage · n = Speed · P_{ed} = Power input · I = Current draw · qv = Air flow · p_{fs} = Pressure increase

ebm-papst Mulfingen GmbH & Co. KG · Bachmühle 2 · D-74673 Mulfingen · Phone +49 (0) 7938 81-0 · Fax +49 (0) 7938 81-110 · info1@de.ebmpapst.com · www.ebmpapst.com