W3G300-ER38-45

EC axial fan

with brushless DC motor

Automotive



ebm-papst Mulfingen GmbH & Co. KG
Bachmühle 2 · D-74673 Mulfingen
Phone +49 7938 81-0
Fax +49 7938 81-110
info1@de.ebmpapst.com
www.ebmpapst.com

Limited partnership · Headquarters Mulfingen
County court Stuttgart · HRA 590344

General partner Elektrobau Mulfingen GmbH · Headquarters Mulfingen
County court Stuttgart · HRB 590142

ErP2015 EXCEEDS THE NORM

Nominal data

Type	**W3G300-ER38-45**	
Motor	**M3G074-CF**	
Nominal voltage	VDC	27.5
Nominal voltage range	VDC	15 .. 32
Type of data definition		fa/cu
Speed	min^{-1}	3320
Power input	W	335
Current draw	A	12.2
Min. ambient temperature	°C	-40
Max. ambient temperature	°C	70

ml = Max. load · me = Max. efficiency · fa = Running at free air · cs = Customer specs · cu = Customer unit
Subject to alterations

Data according to ErP directive

Installation category	A
Efficiency category	Static
Variable speed drive	Yes
Specific ratio*	1.00

* Specific ratio = 1 + p_{fs} / 100 000 Pa

		Actual	Request 2013	Request 2015
Overall efficiency η_{es}	%	41.2	26.9	30.9
Efficiency grade N		50.3	36	40
Power input P_e	kW	0.36		
Air flow q_v	m³/h	2010		
Pressure increase p_{fs}	Pa	243		
Speed n	min^{-1}	3255		

Data definition with optimum efficiency. LU-67589
The ErP data is determined using a motor-impeller combination in a standardised measurement configuration.

ebmpapst

EC axial fan

with brushless DC motor

Automotive

Technical features

Size	300 mm
Direction of rotation	"A"
Type of protection	IP 24 KM
Insulation class	"B"
Humidity class	F3-2
Cooling bore / aperture	Rotor-side
Motor bearing	Ball bearing
Electrical leads	With plug
Motor protection	Reverse polarity and locked-rotor protection
Cable exit	Lateral
Approval	EAC; E1

ebm-papst Mulfingen GmbH & Co. KG · Bachmühle 2 · D-74673 Mulfingen · Phone +49 (0) 7938 81-0 · Fax +49 (0) 7938 81-110 · info1@de.ebmpapst.com · www.ebmpapst.com

EC axial fan

with brushless DC motor

Automotive

Product drawing

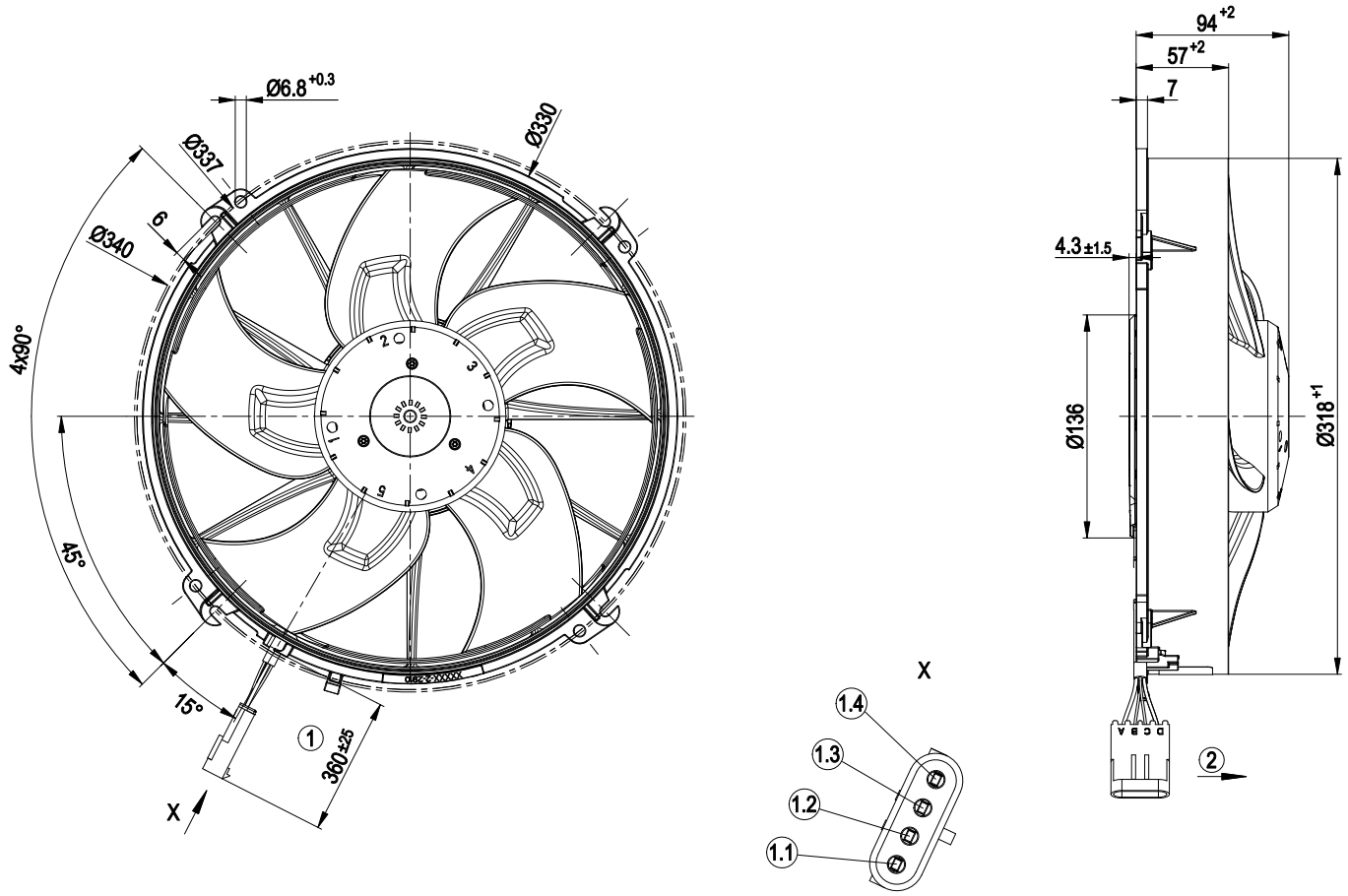

1	Connection line with 4-pole connector Packard Electric 12010974, coded
1.1	+ UB (red)
1.2	PWM/LIN (blue)
1.3	CGND (white)
1.4	GND (black)
	Customer circuit socket:
	Housing: Packard 12015797
	Plug contacts: Packard 120 89188 and Packard 121 24580
	Seal: Packard 153 24982 and Packard 153 24983

ebm-papst Mulfingen GmbH & Co. KG · Bachmühle 2 · D-74673 Mulfingen · Phone +49 (0) 7938 81-0 · Fax +49 (0) 7938 81-110 · info1@de.ebmpapst.com · www.ebmpapst.com

EC axial fan

with brushless DC motor

Automotive

Connection screen

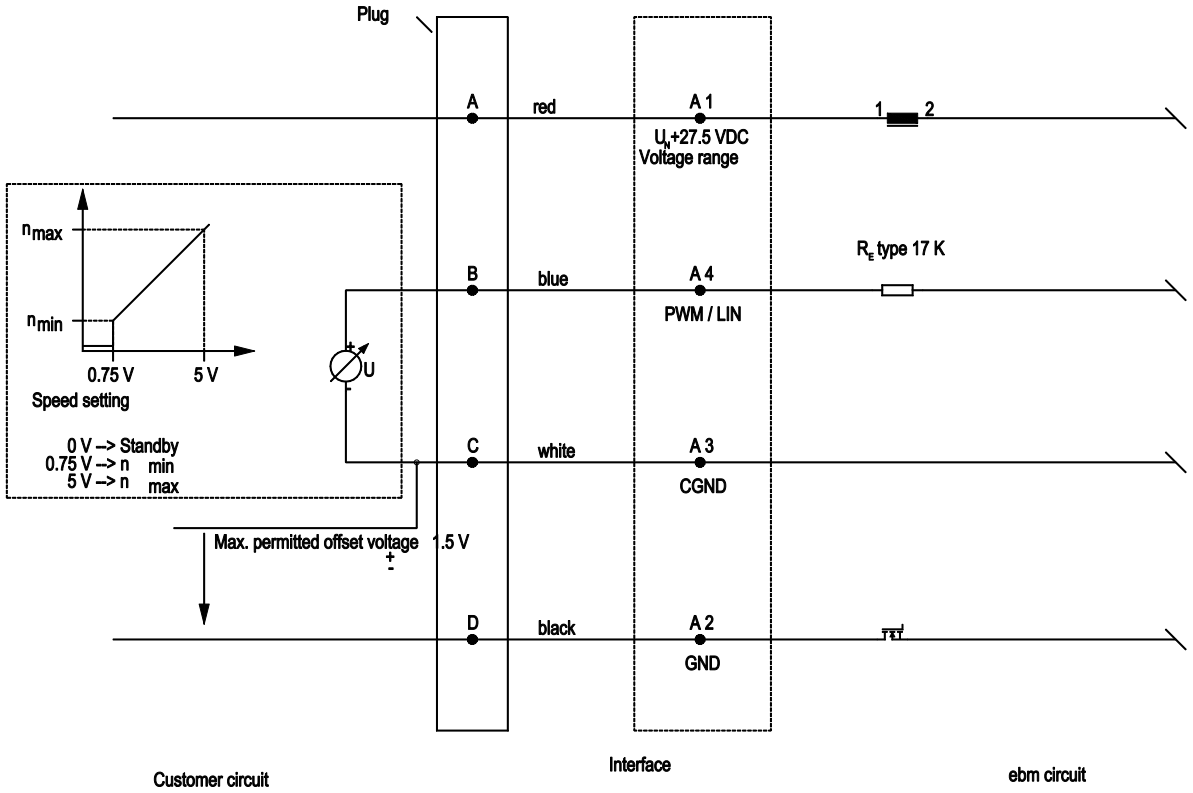

ebm-papst Mulfingen GmbH & Co. KG · Bachmühle 2 · D-74673 Mulfingen · Phone +49 (0) 7938 81-0 · Fax +49 (0) 7938 81-110 · info1@de.ebmpapst.com · www.ebmpapst.com

EC axial fan

with brushless DC motor

Automotive

Charts: Air flow

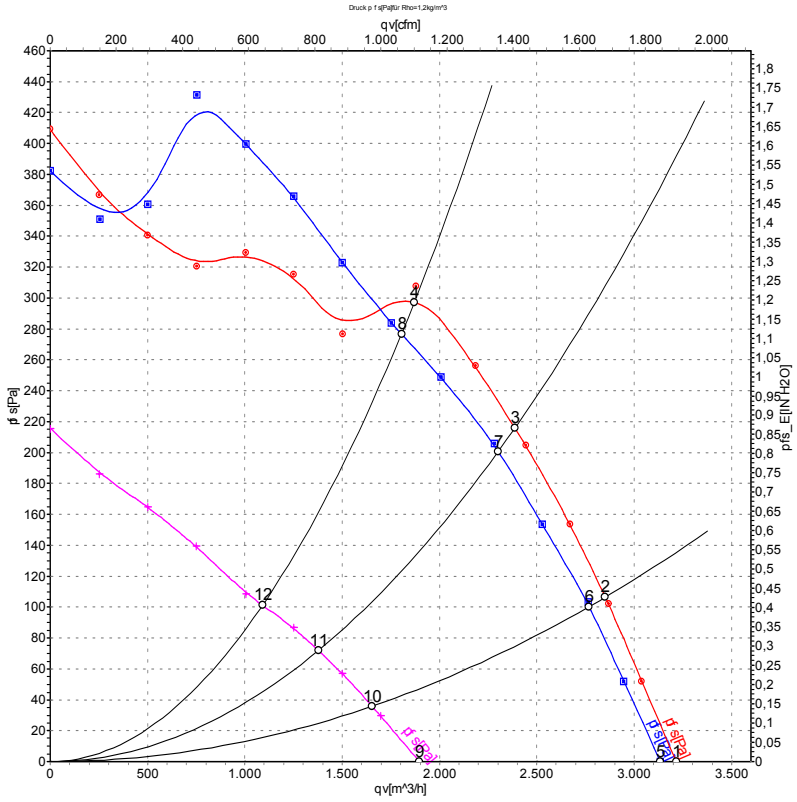

Measurement: LU-67590
Measurement: LU-67589
Measurement: LU-67591

Air performance measured as per ISO 5801 Installation category A. For detailed information on the measuring set-up, please contact ebm-papst. Suction-side noise levels: LwA measured as per ISO 13347 / LpA measured with 1m distance to fan axis. The values given are valid under the measuring conditions mentioned above and may vary according to the actual installation situation. With any deviation from the standard set-up, the specific values have to be checked and reviewed with the unit installed.

Measured values

	U	n	P_{ed}	I	qv	p_{fs}
	V	min^{-1}	W	A	m^3/h	Pa
1	32	3385	356	11.08	3215	0
2	32	3380	384	11.99	2850	107
3	32	3385	406	12.69	2390	216
4	32	3370	428	13.36	1870	307
5	27.5	3320	335	12.20	3135	0
6	27.5	3295	353	12.81	2770	102
7	27.5	3275	364	13.22	2300	202
8	27.5	3240	377	13.71	1805	277
9	15	2025	79	5.28	1895	0
10	15	2005	84	5.58	1655	36
11	15	1995	86	5.76	1380	72
12	15	1980	91	6.04	1090	101

U = Supply voltage · n = Speed · P_{ed} = Power input · I = Current draw · qv = Air flow · p_{fs} = Pressure increase

ebm-papst Mulfingen GmbH & Co. KG · Bachmühle 2 · D-74673 Mulfingen · Phone +49 (0) 7938 81-0 · Fax +49 (0) 7938 81-110 · info1@de.ebmpapst.com · www.ebmpapst.com