W3G400-CN04-32

EC axial fan - HyBlade

sickled blades (S series)

Wall ring with guard grille, Automotive

ebm-papst Mulfingen GmbH & Co. KG
Bachmühle 2 · D-74673 Mulfingen
Phone +49 7938 81-0
Fax +49 7938 81-110
info1@de.ebmpapst.com
www.ebmpapst.com

Limited partnership · Headquarters Mulfingen
County court Stuttgart · HRA 590344

General partner Elektrobau Mulfingen GmbH · Headquarters Mulfingen
County court Stuttgart · HRB 590142

ErP2015 EXCEEDS THE NORM

Nominal data

Type	**W3G400-CN04-32**
Motor	**M3G074-CF**

Phase		1~
Nominal voltage	VAC	230
Nominal voltage range	VAC	200 .. 240
Frequency	Hz	50/60
Type of data definition		ml
Speed	min^{-1}	1080
Power input	W	140
Current draw	A	1.15
Max. back pressure	Pa	75
Min. ambient temperature	°C	-25
Max. ambient temperature	°C	60

ml = Max. load · me = Max. efficiency · fa = Running at free air · cs = Customer specs · cu = Customer unit
Subject to alterations

Data according to ErP directive

Installation category	A
Efficiency category	Static
Variable speed drive	Yes
Specific ratio*	1.00

* Specific ratio = 1 + p_{fs} / 100 000 Pa

		Actual	Request 2015
Overall efficiency η_{es}	%	36.8	28.1
Efficiency grade N		48.7	40
Power input P_{ed}	kW	0.13	
Air flow q_v	m^3/h	2700	
Pressure increase p_{fs}	Pa	58	
Speed n	min^{-1}	1095	

Data definition with optimum efficiency. LU-137607
The ErP data is determined using a motor-impeller combination in a standardised measurement configuration.

EC axial fan - HyBlade

sickled blades (S series)

Wall ring with guard grille, Automotive

Technical features

Mass	6.2 kg
Size	400 mm
Material of blades	Press-fitted sheet steel blank, sprayed with PP plastic
Material of wall ring	Sheet steel, galvanised and coated in black plastic (RAL 9005)
Material of guard grille	Steel, coated in black plastic (RAL9005)
Number of blades	5
Direction of air flow	"V"
Direction of rotation	Counter-clockwise, seen on rotor
Type of protection	IP 54
Insulation class	"B"
Humidity class	F3-1
Max. permissible ambient motor temp. (transp./ storage)	+ 80 °C
Min. permissible ambient motor temp. (transp./storage)	- 40 °C
Mounting position	Any
Condensate discharge holes	None, open rotor
Cooling bore / aperture	Rotor-side
Operation mode	S1
Motor bearing	Ball bearing
Technical features	- Output 10 VDC, max. 1.1 mA - Tach output - Output limit - Motor current limit - Soft start - Control input 0-10 VDC / PWM - Control interface with SELV potential safely disconnected from the mains - Over-temperature protected electronics / motor
Touch current acc. IEC 60990 (measuring network Fig. 4, TN system)	<= 3.5 mA
Motor protection	PTC resistor
Cable exit	Variable
Protection class	I (if protective earth is connected by customer)
Product conforming to standard	EN 60335-1; CE
Approval	C22.2 Nr.77 + CAN/CSA-E60730-1; UL 1004-7 + 60730; CCC

ebm-papst Mulfingen GmbH & Co. KG · Bachmühle 2 · D-74673 Mulfingen · Phone +49 (0) 7938 81-0 · Fax +49 (0) 7938 81-110 · info1@de.ebmpapst.com · www.ebmpapst.com

EC axial fan - HyBlade

sickled blades (S series)

Wall ring with guard grille, Automotive

Product drawing

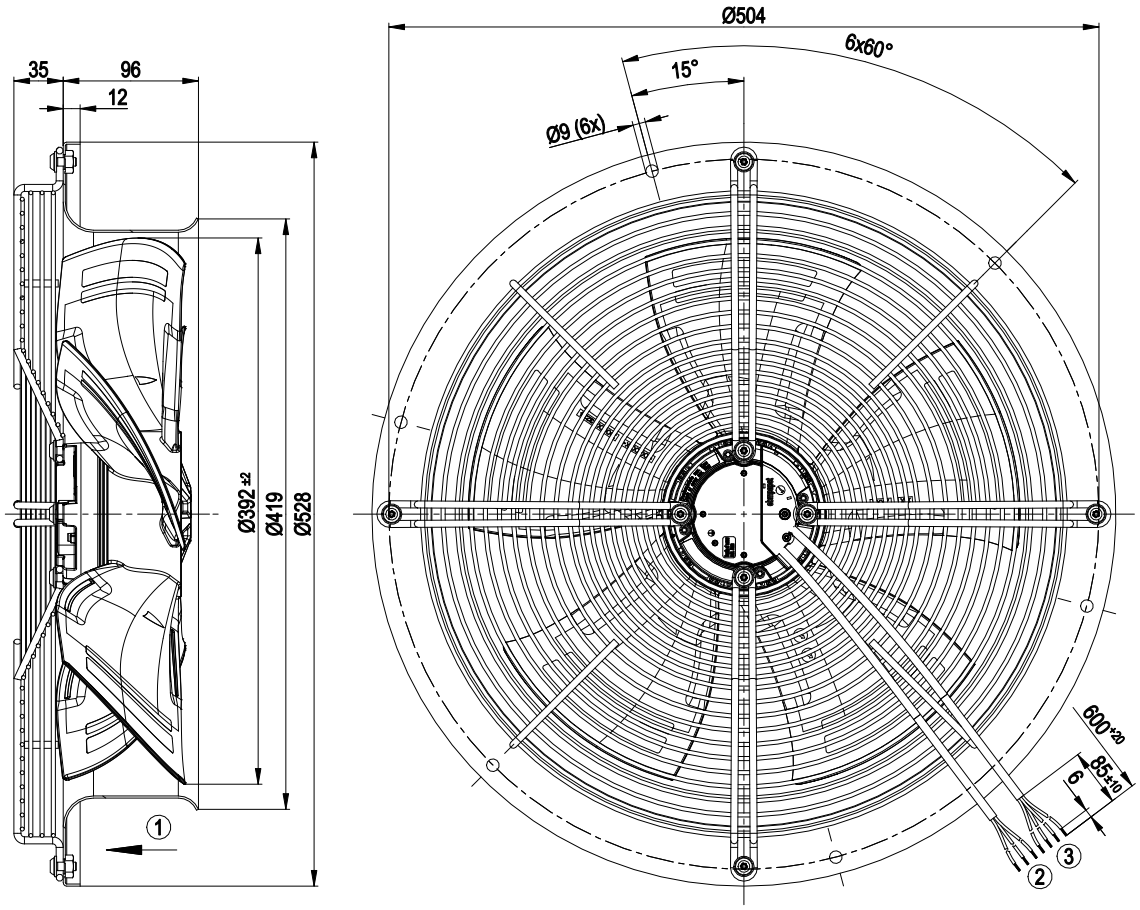

1	Direction of air flow "V"
2	Connection line PVC 3G AWG20, 3x brass lead tips crimped
3	Connection line PVC 4X AWG22, 4x brass lead tips crimped

ebm-papst Mulfingen GmbH & Co. KG · Bachmühle 2 · D-74673 Mulfingen · Phone +49 (0) 7938 81-0 · Fax +49 (0) 7938 81-110 · info1@de.ebmpapst.com · www.ebmpapst.com

EC axial fan - HyBlade

sickled blades (S series)

Wall ring with guard grille, Automotive

Connection screen

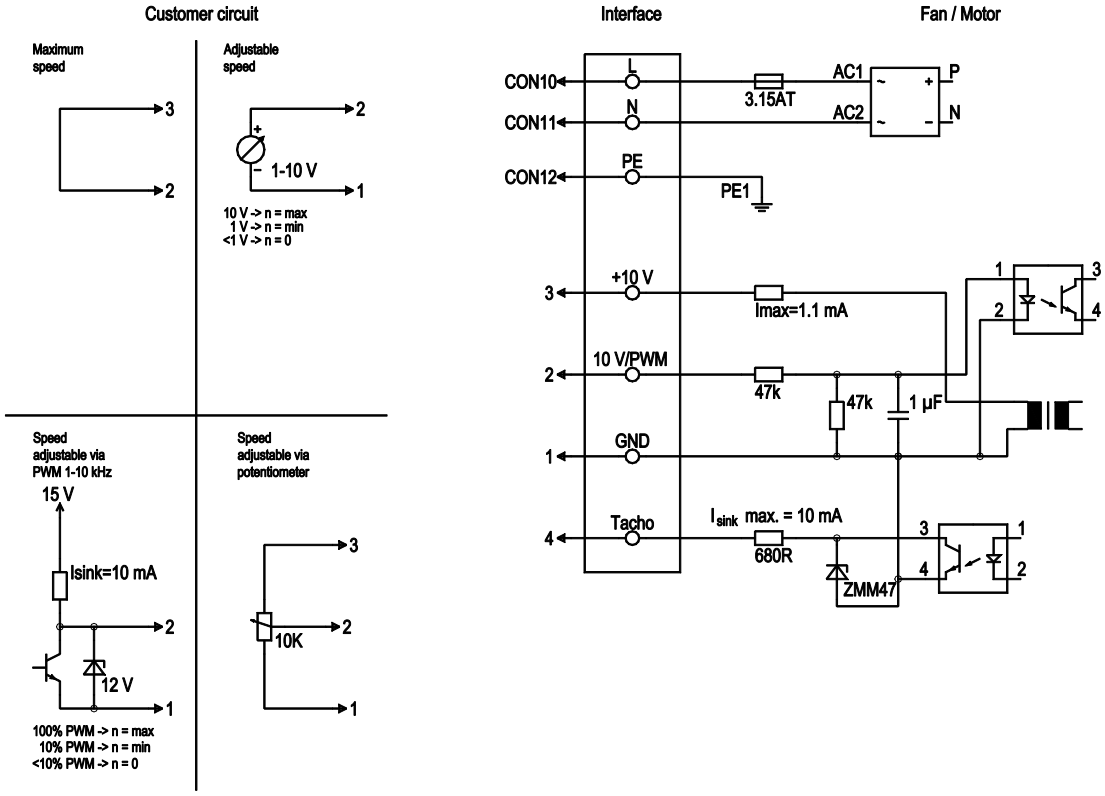

No.	Conn.	Designation	Colour	Function / assignment
	CON10	L	black	Power supply 230 VAC, 50-60 Hz, for voltage range refer to rating plate
	CON11	N	blue	Neutral conductor
	CON12	PE	green/yellow	Protective earth
	1	GND	blue	GND - Connection for control interface
	2	0- 10V PWM	yellow	Control input 0 - 10 V or PWM, electrically isolated
	3	10V/ max 1.1mA	red	Voltage output 10 V / 1.1 mA, electrically isolated, not short-circuit-proof, Isink = 10 mA
	4	Tach	white	Tach output: open collector, 1 pulse per revolution, electrically isolated, Isink max = 10 mA

ebm-papst Mulfingen GmbH & Co. KG · Bachmühle 2 · D-74673 Mulfingen · Phone +49 (0) 7938 81-0 · Fax +49 (0) 7938 81-110 · info1@de.ebmpapst.com · www.ebmpapst.com

EC axial fan - HyBlade

sickled blades (S series)

Wall ring with guard grille, Automotive

Charts: Air flow 50 Hz

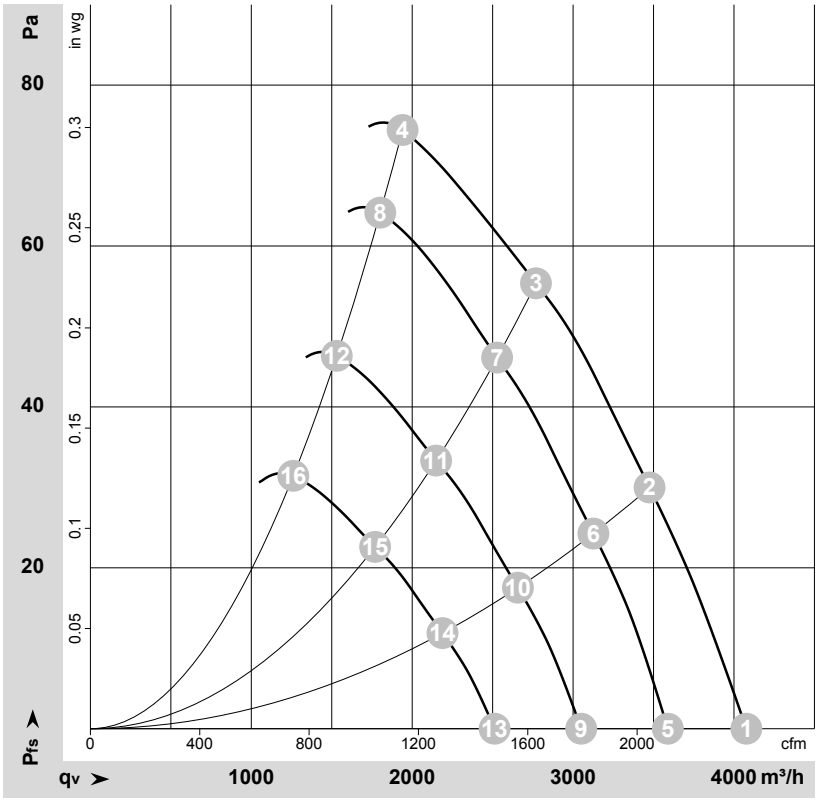

ρ = 1,15 kg/m³ ± 2%

Measurement: LU-137607

Air performance measured as per ISO 5801 Installation category A. For detailed information on the measuring set-up, please contact ebm-papst. Suction-side noise levels: LwA measured as per ISO 13347 / LpA measured with 1m distance to fan axis. The values given are valid under the measuring conditions mentioned above and may vary according to the actual installation situation. With any deviation from the standard set-up, the specific values have to be checked and reviewed with the unit installed.

Measured values

	U	f	n	P_{ed}	I	LpA_{in}	LwA_{in}	qv	p_{fs}
	V	Hz	min^{-1}	W	A	dB(A)	dB(A)	m^3/h	Pa
1	230	50	1135	116	0.97	62	69	4075	0
2	230	50	1110	127	1.05	59	66	3475	30
3	230	50	1095	133	1.09	55	63	2770	55
4	230	50	1080	140	1.15	61	69	1940	75
5	230	50	1000	79	0.66	59	66	3590	0
6	230	50	1000	92	0.76	57	63	3125	24
7	230	50	1000	101	0.83	53	60	2530	46
8	230	50	1000	110	0.91	59	67	1800	64
9	230	50	850	49	0.40	55	62	3050	0
10	230	50	850	57	0.47	53	59	2655	18
11	230	50	850	62	0.51	49	56	2150	33
12	230	50	850	68	0.56	55	63	1530	46
13	230	50	700	27	0.23	50	57	2510	0
14	230	50	700	32	0.26	48	55	2190	12
15	230	50	700	35	0.28	44	51	1770	23
16	230	50	700	38	0.31	50	58	1260	31

U = Supply voltage · f = Frequency · n = Speed · P_{ed} = Power input · I = Current draw · LpA_{in} = Sound pressure level inlet side · LwA_{in} = Sound power level inlet side · qv = Air flow
p_{fs} = Pressure increase

ebm-papst Mulfingen GmbH & Co. KG · Bachmühle 2 · D-74673 Mulfingen · Phone +49 (0) 7938 81-0 · Fax +49 (0) 7938 81-110 · info1@de.ebmpapst.com · www.ebmpapst.com