**W3G450-SO02-30**

# EC axial fan

sickled blades (S series), single inlet

Wall ring with air-guiding system

**ebm-papst Mulfingen GmbH & Co. KG**
Bachmühle 2 · D-74673 Mulfingen
Phone +49 7938 81-0
Fax +49 7938 81-110
info1@de.ebmpapst.com
www.ebmpapst.com

Limited partnership · Headquarters Mulfingen
County court Stuttgart · HRA 590344

General partner Elektrobau Mulfingen GmbH · Headquarters Mulfingen
County court Stuttgart · HRB 590142

ErP2015 EXCEEDS THE NORM

## Nominal data

| | |
|---|---|
| **Type** | **W3G450-SO02-30** |
| **Motor** | **M3G074-DF** |

| | | |
|---|---|---|
| Phase | | 1~ |
| Nominal voltage | VAC | 230 |
| Nominal voltage range | VAC | 200 .. 240 |
| Frequency | Hz | 50/60 |
| Type of data definition | | ml |
| Speed | $min^{-1}$ | 980 |
| Power input | W | 163 |
| Current draw | A | 1.34 |
| Max. back pressure | Pa | 74 |
| Min. ambient temperature | °C | -40 |
| Max. ambient temperature | °C | 40 |

ml = Max. load · me = Max. efficiency · fa = Running at free air · cs = Customer specs · cu = Customer unit
Subject to alterations

## Data according to ErP directive

| | |
|---|---|
| Installation category | A |
| Efficiency category | Static |
| Variable speed drive | Yes |
| Specific ratio* | 1.00 |

* Specific ratio = 1 + $p_{fs}$ / 100 000 Pa

| | | Actual | Request 2013 | Request 2015 |
|---|---|---|---|---|
| Overall efficiency $\eta_{es}$ | % | 39.8 | 24.6 | 28.6 |
| Efficiency grade N | | 51.2 | 36 | 40 |
| Power input $P_{ed}$ | kW | 0.16 | | |
| Air flow $q_v$ | $m^3/h$ | 3505 | | |
| Pressure increase $p_{fs}$ | Pa | 61 | | |
| Speed n | $min^{-1}$ | 1000 | | |

Data definition with optimum efficiency.
The ErP data is determined using a motor-impeller combination in a standardised measurement configuration.

# EC axial fan

sickled blades (S series), single inlet

Wall ring with air-guiding system

## Technical features

| | |
|---|---|
| **Mass** | 10 kg |
| **Size** | 450 mm |
| **Surface of rotor** | Galvanised |
| **Material of blades** | Press-fitted sheet steel blank, sprayed with PP plastic |
| **Material of wall ring** | PP plastic |
| **Number of blades** | 5 |
| **Direction of air flow** | "V" |
| **Direction of rotation** | Counter-clockwise, seen on rotor |
| **Type of protection** | IP 54 |
| **Insulation class** | "B" |
| **Humidity class** | F3-1 |
| **Max. permissible ambient motor temp. (transp./ storage)** | + 70 °C |
| **Min. permissible ambient motor temp. (transp./storage)** | - 40 °C |
| **Mounting position** | Any |
| **Condensate discharge holes** | None, open rotor |
| **Cooling bore / aperture** | Rotor-side |
| **Operation mode** | S1 |
| **Motor bearing** | Ball bearing with anti-freezing grease |
| **Technical features** | - Speed adjustment input (230 V)<br>- Motor current limit<br>- Soft start<br>- Over-temperature protected electronics / motor<br>- Line undervoltage detection |
| **Speed steps** | 2 |
| **EMC interference immunity** | Acc. to EN 61000-6-2 (industrial environment) |
| **EMC harmonics** | Acc. to EN 61000-3-2/3 |
| **EMC interference emission** | Acc. to EN 61000-6-3 (household environment) |
| **Touch current acc. IEC 60990 (measuring network Fig. 4, TN system)** | <= 3.5 mA |
| **Motor protection** | PTC resistor |
| **Cable exit** | Variable |
| **Protection class** | I (if protective earth is connected by customer) |
| **Product conforming to standard** | EN 60335-1 |



ebm-papst Mulfingen GmbH & Co. KG · Bachmühle 2 · D-74673 Mulfingen · Phone +49 (0) 7938 81-0 · Fax +49 (0) 7938 81-110 · info1@de.ebmpapst.com · www.ebmpapst.com

# EC axial fan

sickled blades (S series), single inlet

Wall ring with air-guiding system

## Product drawing

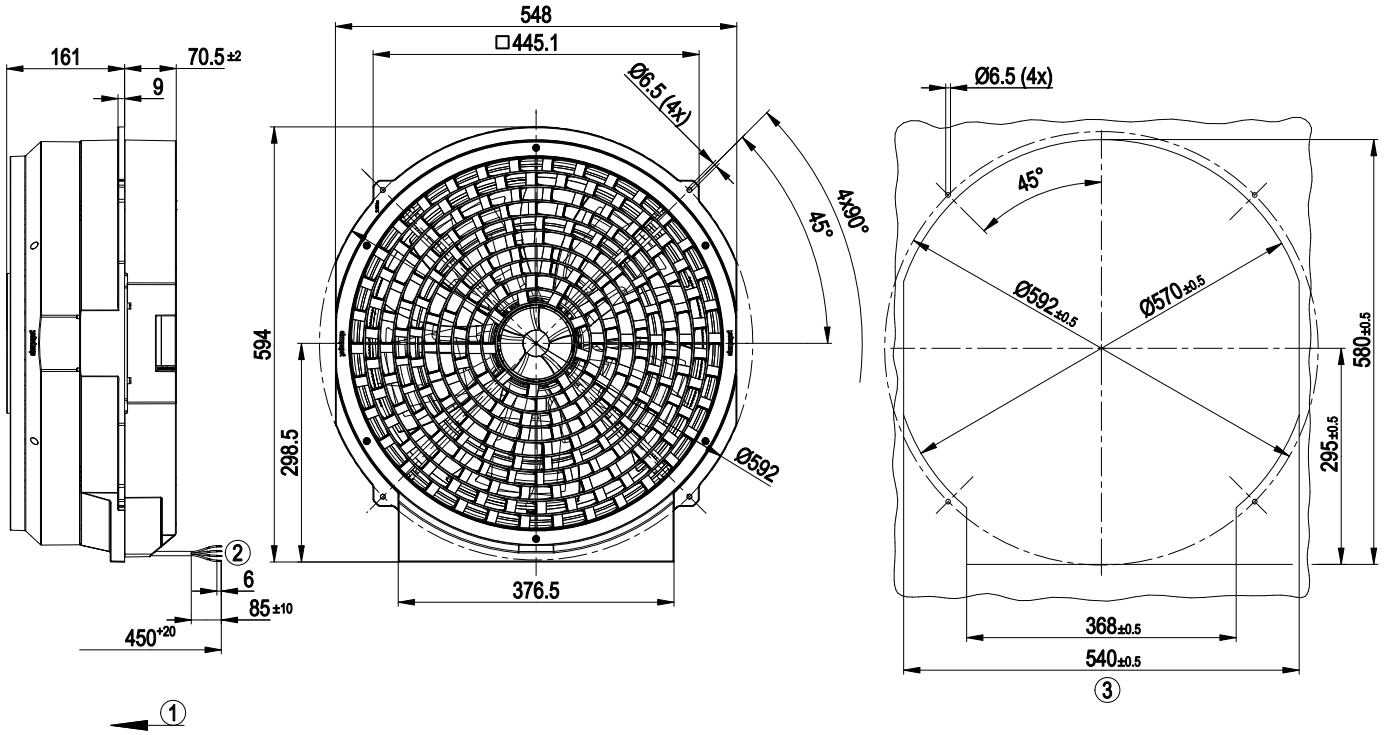


| | |
|---|---|
| 1 | Direction of airflow "V" |
| 2 | Connection line PVC 4G 0.5 mm², 4x lead tips crimped |
| 3 | Mounting dimensions |



ebm-papst Mulfingen GmbH & Co. KG · Bachmühle 2 · D-74673 Mulfingen · Phone +49 (0) 7938 81-0 · Fax +49 (0) 7938 81-110 · info1@de.ebmpapst.com · www.ebmpapst.com

# EC axial fan

sickled blades (S series), single inlet

Wall ring with air-guiding system

## Connection screen

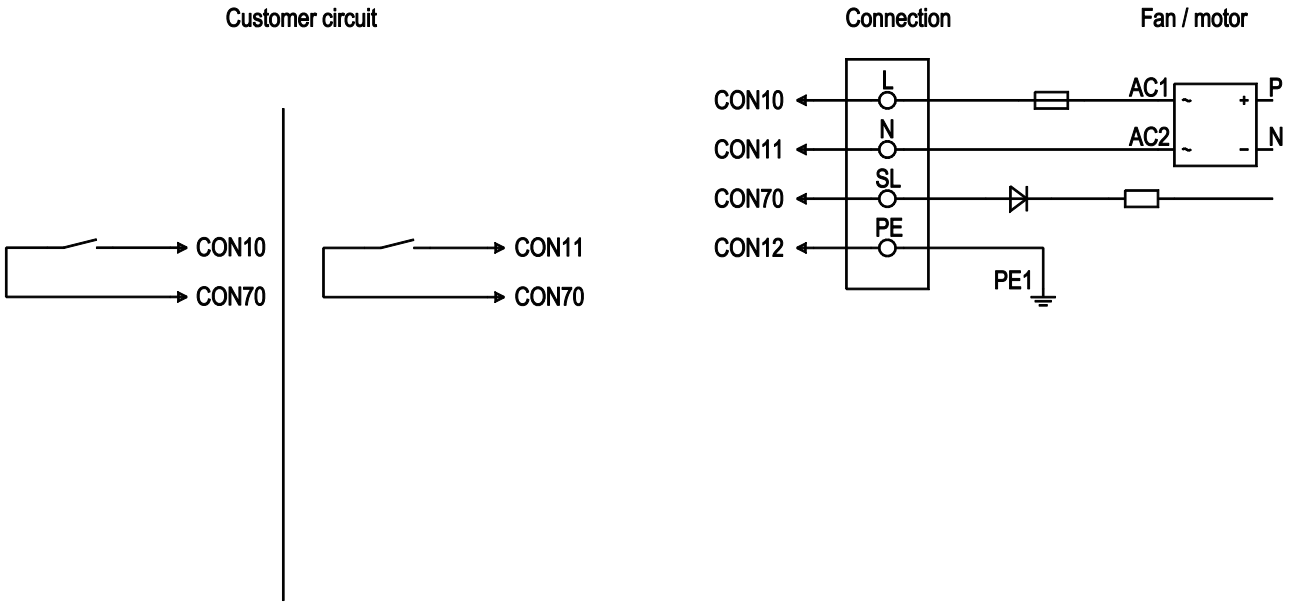


| No. | Conn. | Designation | Colour | Function / assignment |
|---|---|---|---|---|
| | CON 10 | L | black | Power supply 230 VAC, 50 - 60 Hz, see type plate for voltage range |
| | CON 11 | N | blue | Neutral conductor |
| | CON 12 | PE | green/yellow | Protective earth |
| | CON 70 | SL | brown | Speed selection: switch open = speed 1; switch closed = speed 2 |



ebm-papst Mulfingen GmbH & Co. KG · Bachmühle 2 · D-74673 Mulfingen · Phone +49 (0) 7938 81-0 · Fax +49 (0) 7938 81-110 · info1@de.ebmpapst.com · www.ebmpapst.com

# EC axial fan

sickled blades (S series), single inlet

Wall ring with air-guiding system

## Charts: Air flow 50 Hz

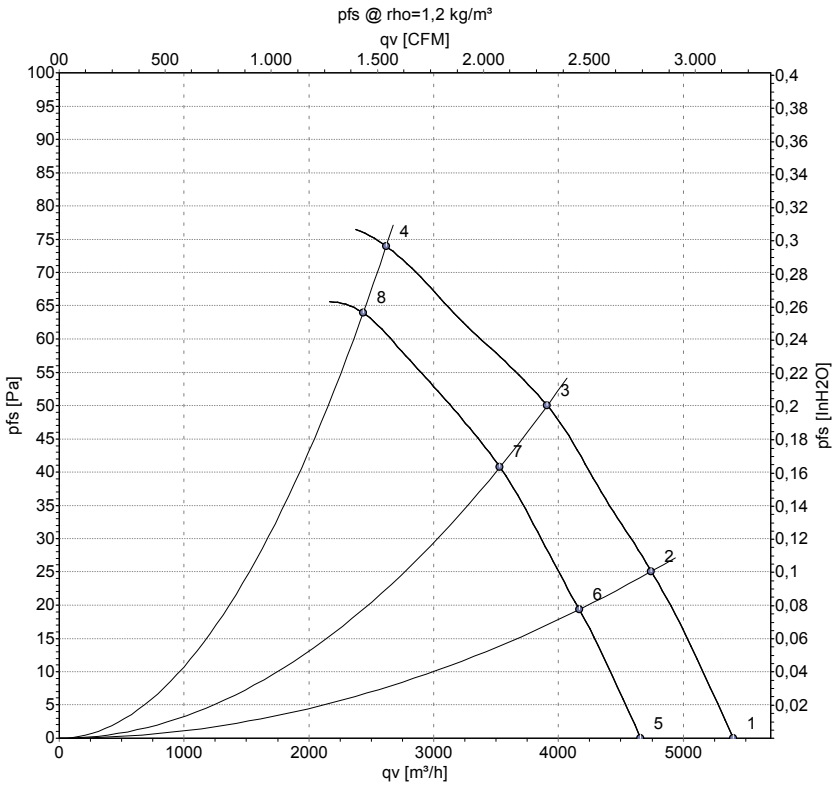


Measurement: LU-156583
Measurement: LU-156686

Air performance measured as per ISO 5801 Installation category A. For detailed information on the measuring set-up, please contact ebm-papst. Suction-side noise levels: LwA measured as per ISO 13347 / LpA measured with 1m distance to fan axis. The values given are valid under the measuring conditions mentioned above and may vary according to the actual installation situation. With any deviation from the standard set-up, the specific values have to be checked and reviewed with the unit installed.

## Measured values

| | U | f | n | $P_{ed}$ | I | $LpA_{in}$ | $LwA_{in}$ | qv | $p_{fs}$ |
|---|---|---|---|---|---|---|---|---|---|
| | V | Hz | $min^{-1}$ | W | A | dB(A) | dB(A) | $m^3/h$ | Pa |
| 1 | 230 | 50 | 1105 | 163 | 1.34 | 63 | 69 | 5400 | 0 |
| 2 | 230 | 50 | 1055 | 163 | 1.34 | 61 | 67 | 4745 | 25 |
| 3 | 230 | 50 | 1015 | 163 | 1.34 | 57 | 63 | 3910 | 50 |
| 4 | 230 | 50 | 980 | 163 | 1.34 | 62 | 68 | 2620 | 74 |
| 5 | 230 | 50 | 955 | 104 | 0.89 | 60 | 65 | 4660 | 0 |
| 6 | 230 | 50 | 935 | 114 | 0.97 | 57 | 63 | 4165 | 19 |
| 7 | 230 | 50 | 920 | 121 | 1.03 | 55 | 61 | 3530 | 41 |
| 8 | 230 | 50 | 895 | 129 | 1.09 | 60 | 67 | 2435 | 65 |

U = Supply voltage · f = Frequency · n = Speed · $P_{ed}$ = Power input · I = Current draw · $LpA_{in}$ = Sound pressure level inlet side · $LwA_{in}$ = Sound power level inlet side · qv = Air flow
$p_{fs}$ = Pressure increase



ebm-papst Mulfingen GmbH & Co. KG · Bachmühle 2 · D-74673 Mulfingen · Phone +49 (0) 7938 81-0 · Fax +49 (0) 7938 81-110 · info1@de.ebmpapst.com · www.ebmpapst.com