W3G450-WC28-30

EC axial fan

sickled blades (S series), single inlet

Wall ring with air-guiding system

ebm-papst Mulfingen GmbH & Co. KG
Bachmühle 2 · D-74673 Mulfingen
Phone +49 7938 81-0
Fax +49 7938 81-110
info1@de.ebmpapst.com
www.ebmpapst.com

Limited partnership · Headquarters Mulfingen
County court Stuttgart · HRA 590344

General partner Elektrobau Mulfingen GmbH · Headquarters Mulfingen
County court Stuttgart · HRB 590142

ErP2015 EXCEEDS THE NORM

Nominal data

Type	**W3G450-WC28-30**	
Motor	**M3G084-FA**	
Phase		1~
Nominal voltage	VAC	230
Frequency	Hz	50/60
Type of data definition		ml
Speed	min^{-1}	1300
Power input	W	345
Current draw	A	2.2
Max. back pressure	Pa	125
Min. ambient temperature	°C	-25
Max. ambient temperature	°C	40

ml = Max. load · me = Max. efficiency · fa = Running at free air · cs = Customer specs · cu = Customer unit
Subject to alterations

Data according to ErP directive

		Actual	Request 2015
01 Overall efficiency η_{es}	%	42.6	30.7
02 Measurement category		A	
03 Efficiency category		Static	
04 Efficiency grade N		51.9	40
05 Variable speed drive		Yes	

09 Power input P_{ed}	kW	0.34
09 Air flow q_v	m^3/h	4005
09 Pressure increase p_{fs}	Pa	118
10 Speed n	min^{-1}	1305
11 Specific ratio*		1.00

Data definition with optimum efficiency.
The ErP data is determined using a motor-impeller combination in a standardised measurement configuration.

* Specific ratio = 1 + p_{fs} / 100 000 Pa

LU-124620

EC axial fan

sickled blades (S series), single inlet

Wall ring with air-guiding system

Technical features

Mass	11 kg
Size	450 mm
Surface of rotor	Coated in black
Material of blades	Press-fitted sheet steel blank, sprayed with PP plastic
Material of wall ring	PP plastic
Number of blades	5
Direction of air flow	"V"
Direction of rotation	Counter-clockwise, seen on rotor
Type of protection	IP 54
Insulation class	"B"
Humidity class	F3-1
Max. permissible ambient motor temp. (transp./ storage)	+ 70 °C
Min. permissible ambient motor temp. (transp./storage)	- 40 °C
Mounting position	Shaft horizontal or rotor on bottom; rotor on top on request
Condensate discharge holes	Rotor-side
Operation mode	S1
Motor bearing	Ball bearing with anti-freezing grease
Technical features	- Output 10 VDC, max. 1.1 mA - Motor current limit - PFC, passive - Soft start - Control input 0-10 VDC / PWM - Control interface with SELV potential safely disconnected from the mains - Over-temperature protected electronics / motor - Line undervoltage detection
EMC interference immunity	Acc. to EN 61000-6-2 (industrial environment)
EMC harmonics	Acc. to EN 61000-3-2/3
EMC interference emission	Acc. to EN 61000-6-3 (household environment)
Touch current acc. IEC 60990 (measuring network Fig. 4, TN system)	<= 3.5 mA
Motor protection	Thermal overload protector (TOP) wired internally
Cable exit	Variable
Protection class	I (if protective earth is connected by customer)
Product conforming to standard	EN 60335-1; CE

ebm-papst Mulfingen GmbH & Co. KG · Bachmühle 2 · D-74673 Mulfingen · Phone +49 (0) 7938 81-0 · Fax +49 (0) 7938 81-110 · info1@de.ebmpapst.com · www.ebmpapst.com

EC axial fan

sickled blades (S series), single inlet

Wall ring with air-guiding system

Product drawing

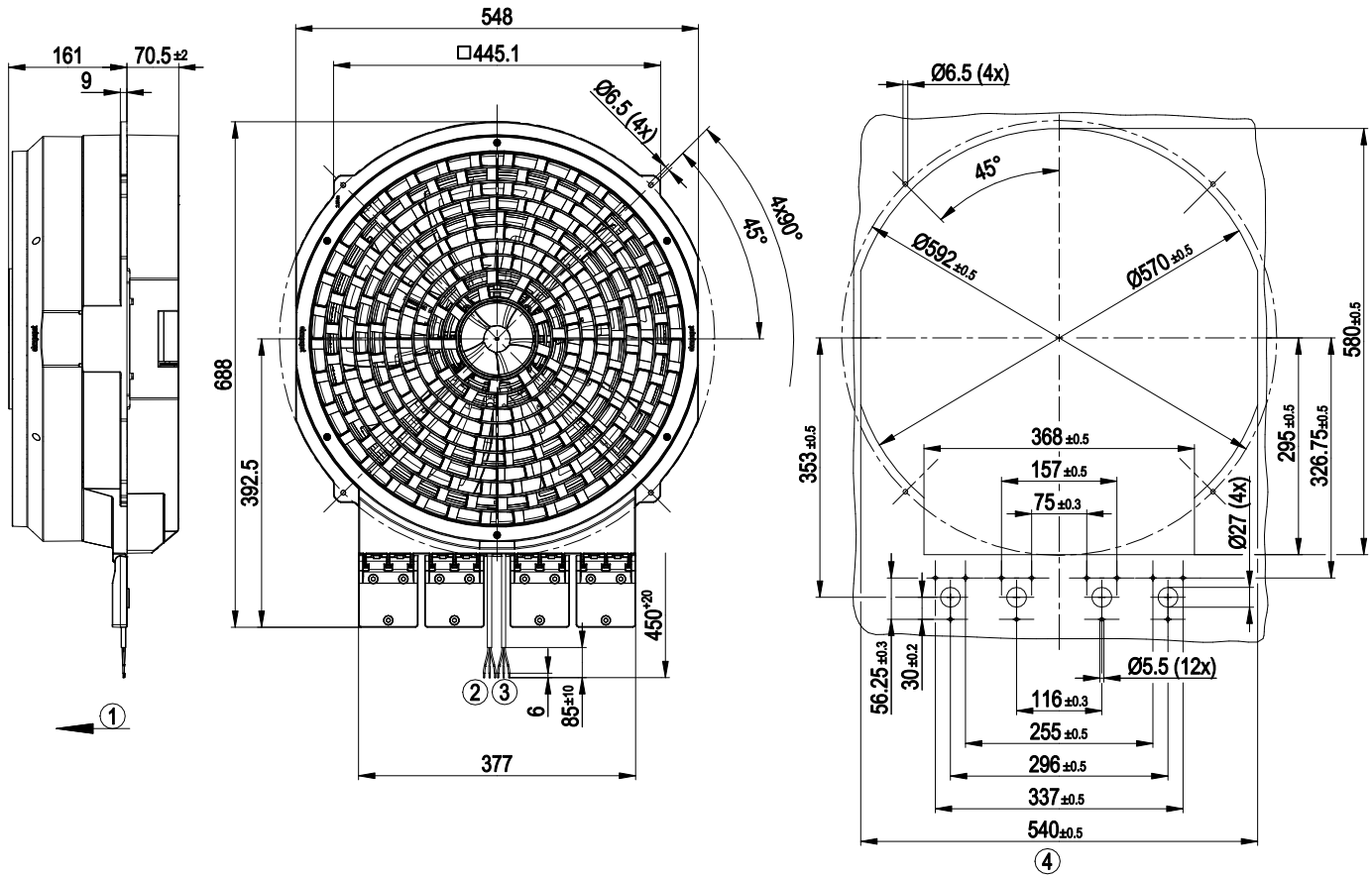

1	Direction of air flow "V"
2	Connection line PVC AWG18, 3x lead tips crimped
3	Control line PVC AWG22, 3x lead tips crimped
4	Mounting dimensions

Connection screen

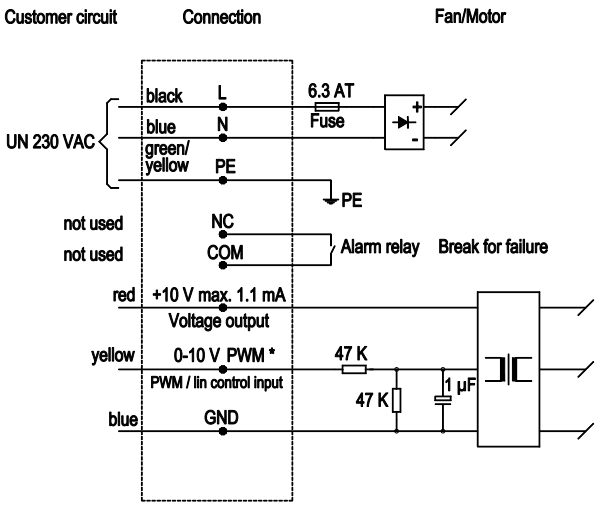

ebm-papst Mulfingen GmbH & Co. KG · Bachmühle 2 · D-74673 Mulfingen · Phone +49 (0) 7938 81-0 · Fax +49 (0) 7938 81-110 · info1@de.ebmpapst.com · www.ebmpapst.com

EC axial fan

sickled blades (S series), single inlet

Wall ring with air-guiding system

Charts: Air flow 50 Hz

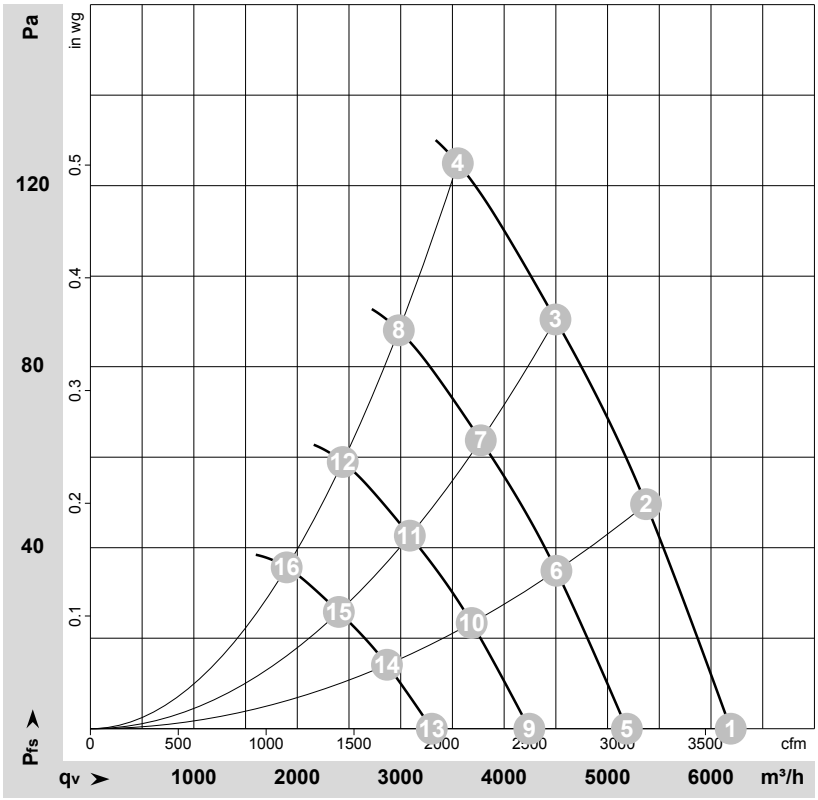

ρ = 1,15 kg/m³ ± 2%

Measurement: LU-146536

Air performance measured as per ISO 5801 Installation category A. For detailed information on the measuring set-up, please contact ebm-papst. Suction-side noise levels: LwA measured as per ISO 13347 / LpA measured with 1m distance to fan axis. The values given are valid under the measuring conditions mentioned above and may vary according to the actual installation situation. With any deviation from the standard set-up, the specific values have to be checked and reviewed with the unit installed.

Measured values

	U	f	n	P_{ed}	I	LpA_{in}	LwA_{in}	LwA_{out}	qv	p_{fs}
	V	Hz	min^{-1}	W	A	dB(A)	dB(A)	dB(A)	m^3/h	Pa
1	230	50	1300	265	1.77	64	70	71	6190	0
2	230	50	1300	301	2.00	62	68	69	5370	50
3	230	50	1300	325	2.15	61	67	69	4495	90
4	230	50	1300	345	2.20	64	70	71	3550	125
5	230	50	1100	156	1.04	60	66	67	5185	0
6	230	50	1100	178	1.18	57	63	65	4505	35
7	230	50	1100	192	1.27	57	63	64	3775	64
8	230	50	1100	205	1.35	59	66	66	2980	88
9	230	50	900	85	0.57	55	61	62	4245	0
10	230	50	900	97	0.64	52	58	60	3685	23
11	230	50	900	105	0.70	52	58	59	3090	43
12	230	50	900	112	0.74	54	61	61	2440	59
13	230	50	700	40	0.27	49	54	56	3300	0
14	230	50	700	46	0.30	46	52	53	2865	14
15	230	50	700	50	0.33	45	51	53	2400	26
16	230	50	700	53	0.35	48	55	55	1900	36

U = Supply voltage · f = Frequency · n = Speed · P_{ed} = Power input · I = Current draw · LpA_{in} = Sound pressure level inlet side · LwA_{in} = Sound power level inlet side · LwA_{out} = Sound power level outlet side
qv = Air flow · p_{fs} = Pressure increase

ebm-papst Mulfingen GmbH & Co. KG · Bachmühle 2 · D-74673 Mulfingen · Phone +49 (0) 7938 81-0 · Fax +49 (0) 7938 81-110 · info1@de.ebmpapst.com · www.ebmpapst.com