W3G910-GS22-01

EC axial fan - HyBlade®

sickled blades (S series)

with full square nozzle

ebm-papst Mulfingen GmbH & Co. KG
Bachmühle 2 · D-74673 Mulfingen
Phone +49 7938 81-0
Fax +49 7938 81-110
info1@de.ebmpapst.com
www.ebmpapst.com

Limited partnership · Headquarters Mulfingen
County court Stuttgart · HRA 590344

General partner Elektrobau Mulfingen GmbH · Headquarters Mulfingen
County court Stuttgart · HRB 590142

ErP2015 EXCEEDS THE NORM

Nominal data

Type	**W3G910-GS22-01**
Motor	**M3G150-FF**

Phase		3~
Nominal voltage	VAC	400
Nominal voltage range	VAC	380 .. 480
Frequency	Hz	50/60
Type of data definition		ml
Speed	min^{-1}	800
Power input	W	1550
Current draw	A	2.4
Max. back pressure	Pa	130
Min. ambient temperature	°C	-25
Max. ambient temperature	°C	60

ml = Max. load · me = Max. efficiency · fa = Running at free air · cs = Customer specs · cu = Customer unit
Subject to alterations

Data according to ErP directive

Installation category	A
Efficiency category	Static
Variable speed drive	Yes
Specific ratio*	1.00

* Specific ratio = 1 + p_{fs} / 100 000 Pa

		Actual	Request 2013	Request 2015
Overall efficiency η_{es}	%	42.7	30.9	34.9
Efficiency grade N		47.8	36	40
Power input P_{ed}	kW	1.59		
Air flow q_v	m^3/h	17690		
Pressure increase p_{fs}	Pa	130		
Speed n	min^{-1}	795		

Data definition with optimum efficiency. LU-121313
The ErP data is determined using a motor-impeller combination in a standardised measurement configuration.

EC axial fan - HyBlade®

sickled blades (S series)

with full square nozzle

Technical features

Mass	47.8 kg
Size	910 mm
Surface of rotor	Coated in black
Material of electronics housing	Die-cast aluminium, coated in black
Material of blades	Aluminium sheet insert, sprayed with PP plastic
Material of wall ring	Sheet steel, pre-galvanised and coated in black plastic (RAL 9005)
Material of guard grille	Steel, coated in black plastic (RAL9005)
Number of blades	5
Blade angle	0°
Direction of air flow	"V"
Direction of rotation	Clockwise, seen on rotor
Type of protection	IP 54
Insulation class	"F"
Humidity class	F4-1
Max. permissible ambient motor temp. (transp./ storage)	+80 °C
Min. permissible ambient motor temp. (transp./storage)	-40 °C
Mounting position	Shaft horizontal or rotor on bottom; rotor on top on request
Condensate discharge holes	Rotor-side
Operation mode	S1
Motor bearing	Ball bearing
Technical features	- Output 10 VDC, max. 10 mA - Output 20 VDC, max. 50 mA - Output for slave 0-10 V - Input for sensor 0-10 V or 4-20 mA - External 24 V input (programming) - External release input - Alarm relay - Integrated PID controller - Motor current limit - PFC, passive - RS485 MODBUS RTU - Soft start - Control input 0-10 VDC / PWM - Control interface with SELV potential safely disconnected from the mains - Over-temperature protected electronics / motor - Line undervoltage / phase failure detection
EMC interference immunity	Acc. to EN 61000-6-2 (industrial environment)
EMC interference emission	Acc. to EN 55022 (Class B, household environment)
Touch current acc. IEC 60990 (measuring network Fig. 4, TN system)	<= 3.5 mA
Electrical leads	Via terminal box
Motor protection	Reverse polarity and locked-rotor protection
Protection class	I (if protective earth is connected by customer)
Product conforming to standard	EN 61800-5-1; CE
Approval	C22.2 Nr.77 + CAN/CSA-E60730-1; EAC; UL 1004-7 + 60730

ebm-papst Mulfingen GmbH & Co. KG · Bachmühle 2 · D-74673 Mulfingen · Phone +49 (0) 7938 81-0 · Fax +49 (0) 7938 81-110 · info1@de.ebmpapst.com · www.ebmpapst.com

EC axial fan - HyBlade®

sickled blades (S series)

with full square nozzle

Product drawing

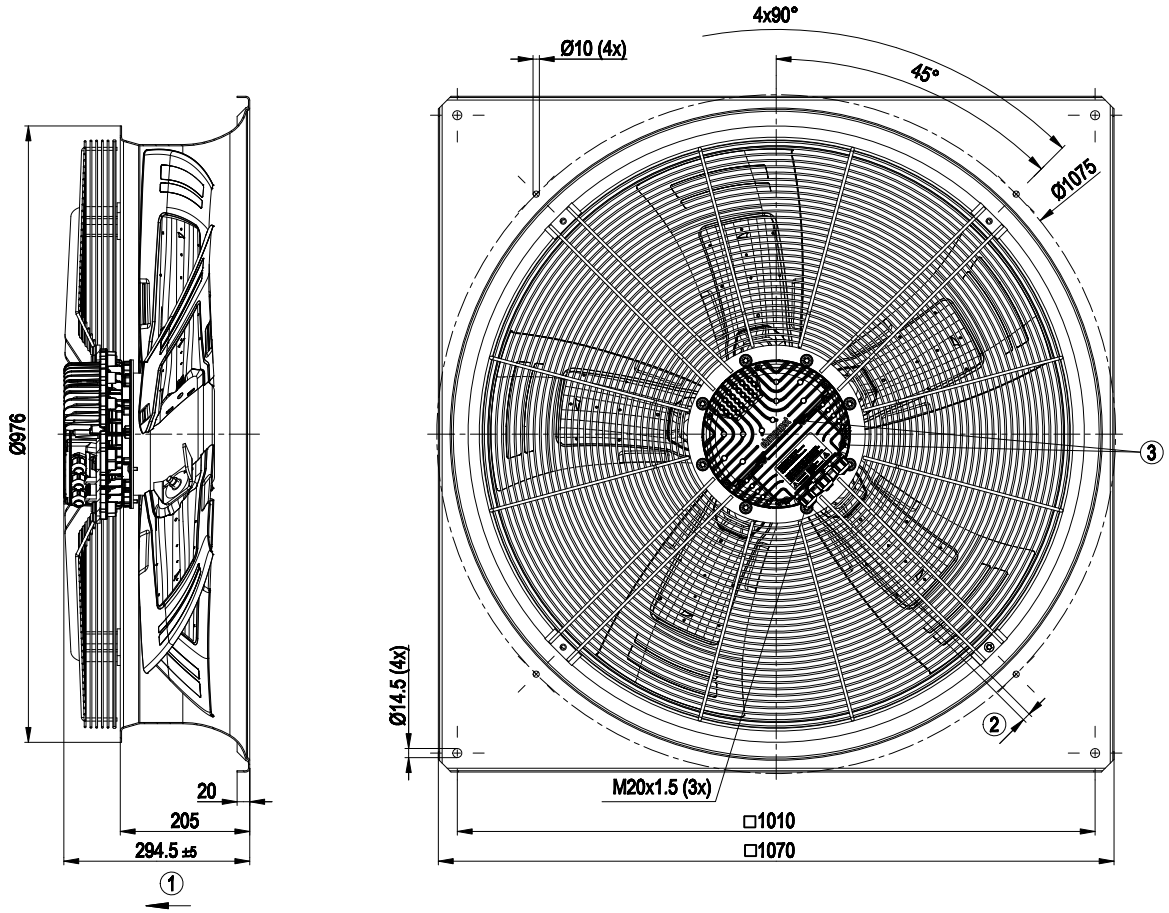

1	Direction of air flow "V"
2	Cable diameter: min. 4 mm, max. 10 mm, tightening torque: 4±0.6 Nm
3	Tightening torque 3.5±0.5 Nm

ebm-papst Mulfingen GmbH & Co. KG · Bachmühle 2 · D-74673 Mulfingen · Phone +49 (0) 7938 81-0 · Fax +49 (0) 7938 81-110 · info1@de.ebmpapst.com · www.ebmpapst.com

EC axial fan - HyBlade®

sickled blades (S series)

with full square nozzle

Connection screen

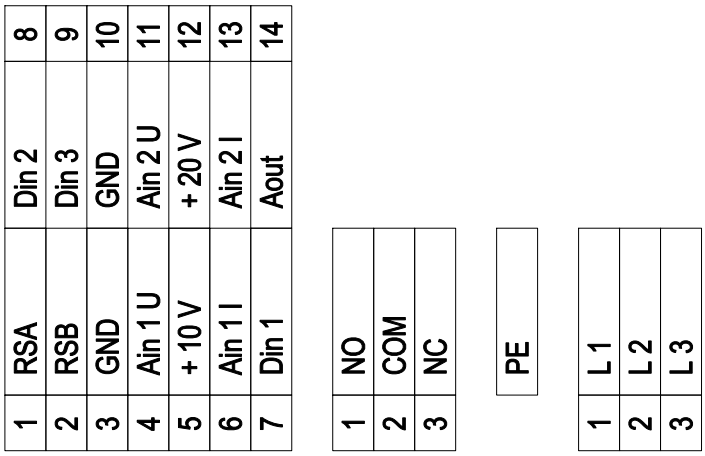

No.	Conn.	Designation	Function / assignment
KL 1	1	L1	Mains supply connection, supply voltage 3~380-480 VAC; 50/60 Hz
KL 1	2	L2	Mains supply connection, supply voltage 3~380-480 VAC; 50/60 Hz
KL 1	3	L3	Mains supply connection, supply voltage 3~380-480 VAC; 50/60 Hz
PE		PE	Earth connection, PE connection
KL 2	1	NO	Status relay, floating status contact; normally open; close with error
KL2	2	COM	Status relay; floating status contact; changeover contact; common connection; contact rating 250 VAC / max. 2 A (AC1) / min. 10 mA
KL2	3	NC	Status relay, floating status contact; break with error
KL 3	1	RSA	Bus connection RS-485, RSA, MODBUS RTU; SELV
KL 3	2	RSB	Bus connection RS-485, RSB, MODBUS RTU; SELV
KL 3	3 / 10	GND	Signal ground for control interface; SELV
KL 3	4	Ain1 U	Analogue input 1, set value: 0-10 V, Ri = 100 kΩ, parametrisable curve, only usable as alternative to input Ain1; SELV
KL 3	5	+ 10 V	Fixed voltage output 10 VDC, +10 V ±3%, max. 10 mA, short-circuit-proof, power supply for external devices (e.g. potentiometer), SELV
KL 3	6	Ain1 I	Analogue input 1, set value: 4-20 mA; Ri = 100 Ω, parametrisable curve, only usable as alternative to input Ain1 U; SELV
KL 3	7	Din1	Digital input 1: enabling of electronics, enabling: open pin or applied voltage 5-50 VDC disabling: bridge to GND or applied voltage <1 VDC reset function: triggers software reset after a level change to <1 VDC; SELV
KL 3	8	Din2	Digital input 2: parameter set switch 1/2, according to EEPROM setting, the valid/used parameter set can be selected via bus or via digital input DIN2. Parameter set 1: open pin or applied voltage 5-50 VDC Parameter set 2: bridge to GND or applied voltage <1 VDC; SELV
KL 3	9	Din3	Digital input 3: controller function of integrated controller, according to EEPROM setting, the controller function of the integrated controller is normally/inversely selectable per bus or per digital input normal: open pin or applied voltage 5-50 VDC inverse: bridge to GND or applied voltage <1 VDC; SELV
KL 3	11	Ain2 U	Analogue input 2, actual value: 0-10 V, Ri = 100 kΩ, parametrisable curve, only usable as alternative to input Ain2; SELV
KL 3	12	+ 20 V	Fixed voltage output 20 VDC, +20 V +25/-10%, max. 50 mA, short-circuit-proof, power supply for external devices (e.g. sensors); SELV

ebm-papst Mulfingen GmbH & Co. KG · Bachmühle 2 · D-74673 Mulfingen · Phone +49 (0) 7938 81-0 · Fax +49 (0) 7938 81-110 · info1@de.ebmpapst.com · www.ebmpapst.com

No.	Conn.	Designation	Function / assignment
KL 3	13	Ain2 I	Analogue input 2, actual value: 4-20 mA, Ri = 100 Ω, parametrisable curve, only usable as alternative to input Ain2 U; SELV
KL 3	14	Aout	Analogue output 0-10 VDC, max. 5 mA, output of the current motor level control coefficient / motor speed parametrisable curve; SELV

ebm-papst Mulfingen GmbH & Co. KG · Bachmühle 2 · D-74673 Mulfingen · Phone +49 (0) 7938 81-0 · Fax +49 (0) 7938 81-110 · info1@de.ebmpapst.com · www.ebmpapst.com

EC axial fan - HyBlade®

sickled blades (S series)

with full square nozzle

Charts: Air flow 50 Hz

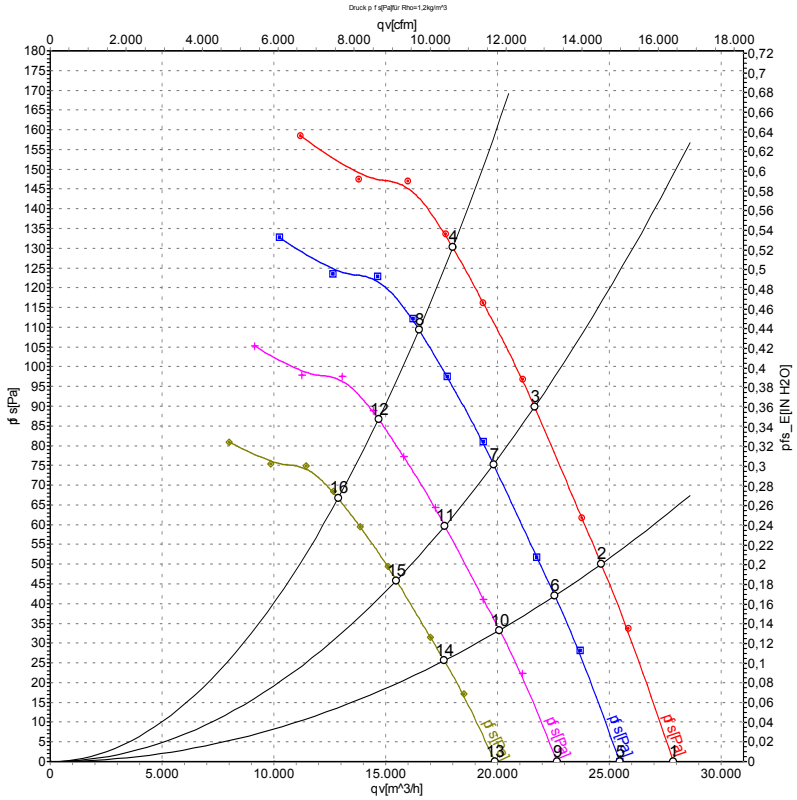

Measurement: LU-121313

Air performance measured as per ISO 5801 Installation category A. For detailed information on the measuring set-up, please contact ebm-papst. Suction-side noise levels: LwA measured as per ISO 13347 / LpA measured with 1m distance to fan axis. The values given are valid under the measuring conditions mentioned above and may vary according to the actual installation situation. With any deviation from the standard set-up, the specific values have to be checked and reviewed with the unit installed.

Measured values

	U	f	n	P_{ed}	I	LpA_{in}	LwA_{in}	LwA_{out}	qv	p_{fs}
	V	Hz	min^{-1}	W	A	dB(A)	dB(A)	dB(A)	m^3/h	Pa
1	400	50	800	1034	1.59	65	73	73	27860	0
2	400	50	800	1257	1.92	64	72	72	24640	50
3	400	50	800	1424	2.17	65	73	72	21660	90
4	400	50	800	1550	2.40	69	76	75	18000	130
5	400	50	730	789	1.22	63	71	71	25460	0
6	400	50	730	965	1.47	63	70	70	22560	42
7	400	50	730	1091	1.66	63	71	70	19820	75
8	400	50	730	1219	1.86	67	74	73	16490	110
9	400	50	650	557	0.86	61	69	69	22670	0
10	400	50	650	682	1.04	60	68	68	20090	33
11	400	50	650	770	1.17	61	68	68	17650	60
12	400	50	650	860	1.31	64	71	71	14680	87
13	400	50	570	376	0.58	58	66	66	19880	0
14	400	50	570	460	0.70	57	65	65	17620	26
15	400	50	570	520	0.79	58	65	65	15480	46
16	400	50	570	580	0.88	61	69	68	12880	67

U = Supply voltage · f = Frequency · n = Speed · P_{ed} = Power input · I = Current draw · LpA_{in} = Sound pressure level inlet side · LwA_{in} = Sound power level inlet side · LwA_{out} = Sound power level outlet side
qv = Air flow · p_{fs} = Pressure increase

ebm-papst Mulfingen GmbH & Co. KG · Bachmühle 2 · D-74673 Mulfingen · Phone +49 (0) 7938 81-0 · Fax +49 (0) 7938 81-110 · info1@de.ebmpapst.com · www.ebmpapst.com