W4D350-JN08-05

AC axial fan

sickled blades (S series), single inlet

Wall ring with guard grille

ebm-papst Mulfingen GmbH & Co. KG
Bachmühle 2 · D-74673 Mulfingen
Phone +49 7938 81-0
Fax +49 7938 81-110
info1@de.ebmpapst.com
www.ebmpapst.com

Limited partnership · Headquarters Mulfingen
County court Stuttgart · HRA 590344

General partner Elektrobau Mulfingen GmbH · Headquarters Mulfingen
County court Stuttgart · HRB 590142

ErP2015 EXCEEDS THE NORM

Nominal data

Type	**W4D350-JN08-05**
Motor	**M4E074-DF**

Phase		3~	3~
Nominal voltage	VAC	400	460
Connection		Y	Y
Frequency	Hz	50	60
Type of data definition		ml	ml
Valid for approval / standard		CE	CE
Speed	min^{-1}	1370	1600
Power input	W	170	255
Current draw	A	0.37	0.42
Max. back pressure	Pa	90	110
Min. ambient temperature	°C	-25	-25
Max. ambient temperature	°C	65	55
Starting current	A	1.1	1.22

ml = Max. load · me = Max. efficiency · fa = Running at free air · cs = Customer specs · cu = Customer unit
Subject to alterations

Data according to ErP directive

Installation category	A
Efficiency category	Static
Variable speed drive	No
Specific ratio*	1.00

* Specific ratio = 1 + p_{fs} / 100 000 Pa

		Actual	Request 2013	Request 2015
Overall efficiency η_{es}	%	28.7	24.6	28.6
Efficiency grade N		40.1	36	40
Power input P_e	kW	0.16		
Air flow q_v	m^3/h	2105		
Pressure increase p_{fs}	Pa	82		
Speed n	min^{-1}	1375		

Data definition with optimum efficiency. LU-131044
The ErP data is determined using a motor-impeller combination in a standardised measurement configuration.

AC axial fan

sickled blades (S series), single inlet

Wall ring with guard grille

Technical features

Mass	5.9 kg
Size	350 mm
Surface of rotor	Coated in black
Material of blades	Press-fitted sheet steel blank, sprayed with PP plastic
Material of wall ring	PP plastic
Material of guard grille	Steel, coated in black plastic (RAL9005)
Number of blades	5
Direction of air flow	"V"
Direction of rotation	Counter-clockwise, seen on rotor
Type of protection	IP 44; Depending on installation and position as per EN 60034-5
Insulation class	"F"
Humidity class	F2-2
Max. permissible ambient motor temp. (transp./ storage)	+ 80 °C
Min. permissible ambient motor temp. (transp./storage)	- 40 °C
Mounting position	Shaft horizontal or rotor on bottom; rotor on top on request
Condensate discharge holes	Rotor-side
Operation mode	S1
Motor bearing	Ball bearing
Touch current acc. IEC 60990 (measuring network Fig. 4, TN system)	< 0.75 mA
Motor protection	Thermal overload protector (TOP) wired internally
Cable exit	Variable
Protection class	I (if protective earth is connected by customer)
Product conforming to standard	EN 60335-1; CE
Approval	CSA C22.2 Nr.100; UL 1004-1

ebm-papst Mulfingen GmbH & Co. KG · Bachmühle 2 · D-74673 Mulfingen · Phone +49 (0) 7938 81-0 · Fax +49 (0) 7938 81-110 · info1@de.ebmpapst.com · www.ebmpapst.com

AC axial fan

sickled blades (S series), single inlet

Wall ring with guard grille

Product drawing

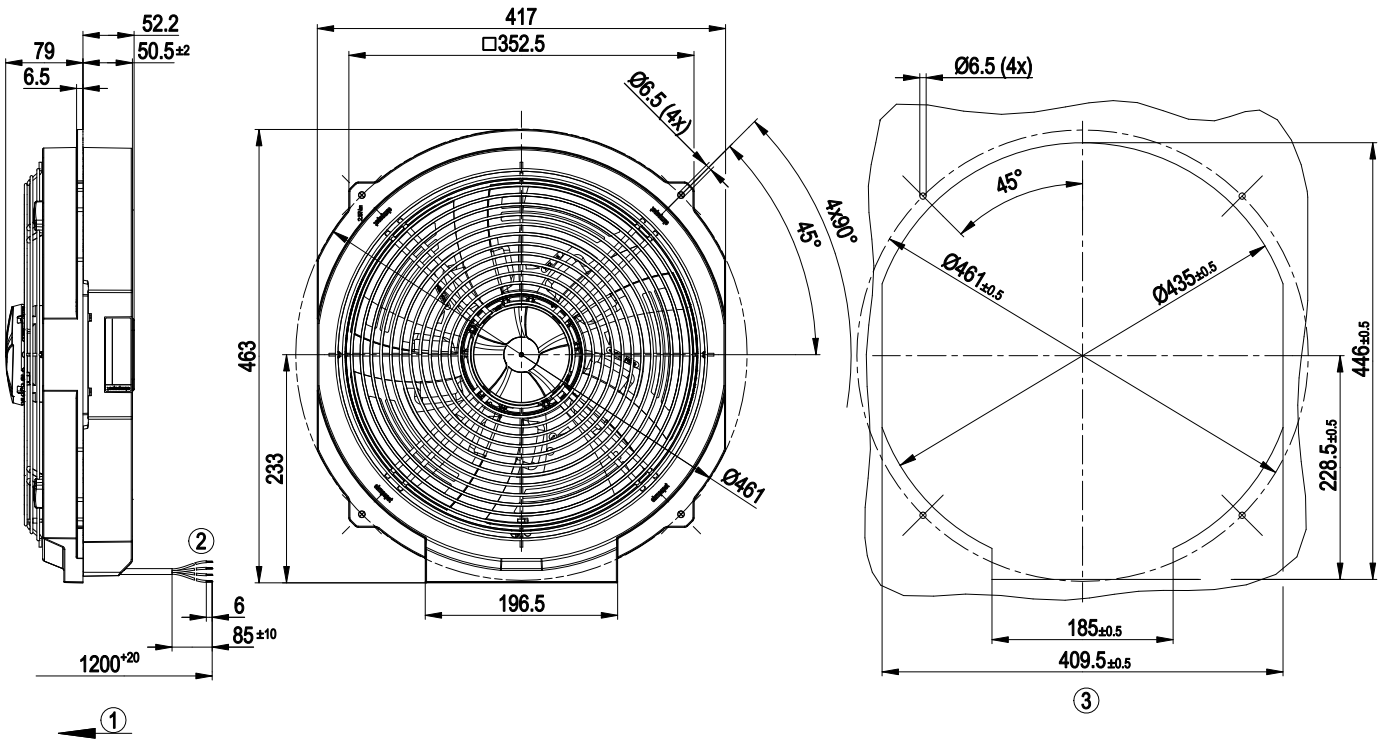

1	Direction of air flow "V"
2	Connection line PFA AWG18, 4x lead tips crimped
3	Mounting dimensions

ebm-papst Mulfingen GmbH & Co. KG · Bachmühle 2 · D-74673 Mulfingen · Phone +49 (0) 7938 81-0 · Fax +49 (0) 7938 81-110 · info1@de.ebmpapst.com · www.ebmpapst.com

AC axial fan

sickled blades (S series), single inlet

Wall ring with guard grille

Connection screen

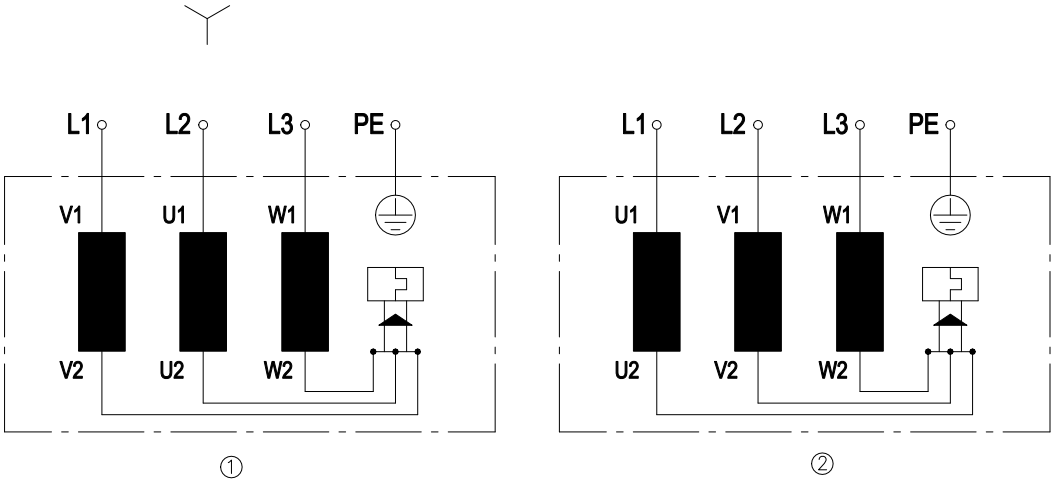

Change direction of rotation by reversing two phases

	Three-phase motor
Y	Star connection
1	Anti-clockwise operation
L1	= V1 = blue
L2	= U1 = black
L3	= W1 = brown
2	Clockwise operation
L1	=U1=black
L2	=V1=blue
L3	=W1=brown
PE	green / yellow

ebm-papst Mulfingen GmbH & Co. KG · Bachmühle 2 · D-74673 Mulfingen · Phone +49 (0) 7938 81-0 · Fax +49 (0) 7938 81-110 · info1@de.ebmpapst.com · www.ebmpapst.com

AC axial fan

sickled blades (S series), single inlet

Wall ring with guard grille

Charts: Air flow 50 Hz

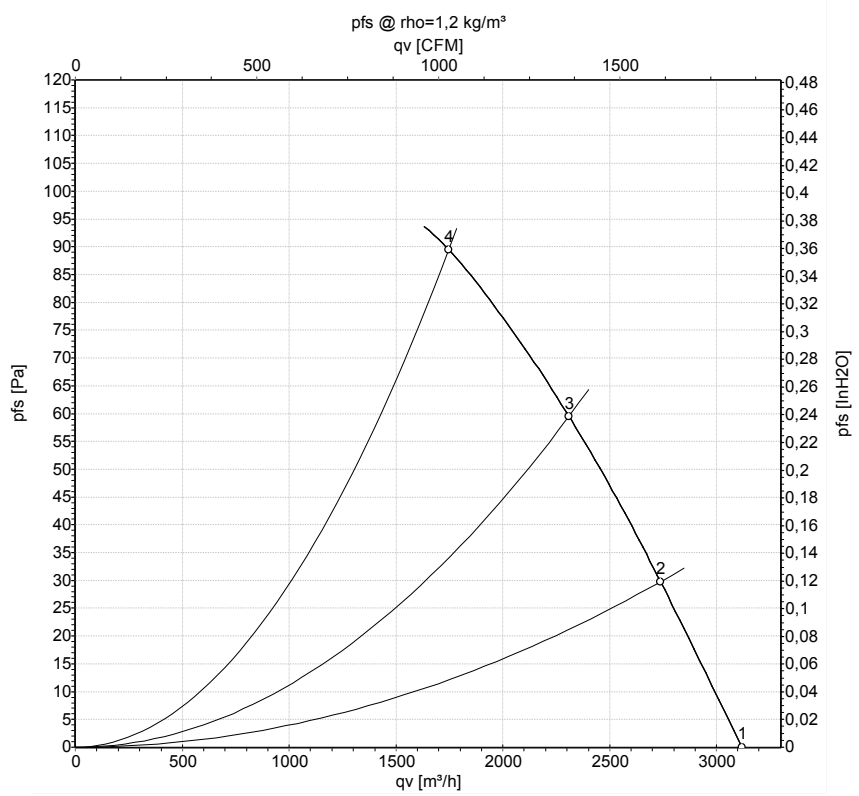

Measurement: LU-164806

Air performance measured as per ISO 5801 Installation category A. For detailed information on the measuring set-up, please contact ebm-papst. Suction-side noise levels: LwA measured as per ISO 13347 / LpA measured with 1m distance to fan axis. The values given are valid under the measuring conditions mentioned above and may vary according to the actual installation situation. With any deviation from the standard set-up, the specific values have to be checked and reviewed with the unit installed.

Measured values

	Conn.	U	f	n	P_e	I	LpA_{in}	LwA_{in}	qv	p_{fs}
		V	Hz	min^{-1}	W	A	dB(A)	dB(A)	m^3/h	Pa
1	Y	400	50	1400	130	0.33	62	68	3120	0
2	Y	400	50	1390	141	0.34	61	67	2740	30
3	Y	400	50	1375	151	0.34	59	66	2310	60
4	Y	400	50	1370	170	0.37	61	68	1745	90

Conn. = Connection · U = Supply voltage · f = Frequency · n = Speed · P_e = Power input · I = Current draw · LpA_{in} = Sound pressure level inlet side · LwA_{in} = Sound power level inlet side
qv = Air flow · p_{fs} = Pressure increase

ebm-papst Mulfingen GmbH & Co. KG · Bachmühle 2 · D-74673 Mulfingen · Phone +49 (0) 7938 81-0 · Fax +49 (0) 7938 81-110 · info1@de.ebmpapst.com · www.ebmpapst.com

AC axial fan

sickled blades (S series), single inlet

Wall ring with guard grille

Charts: Air flow 60 Hz

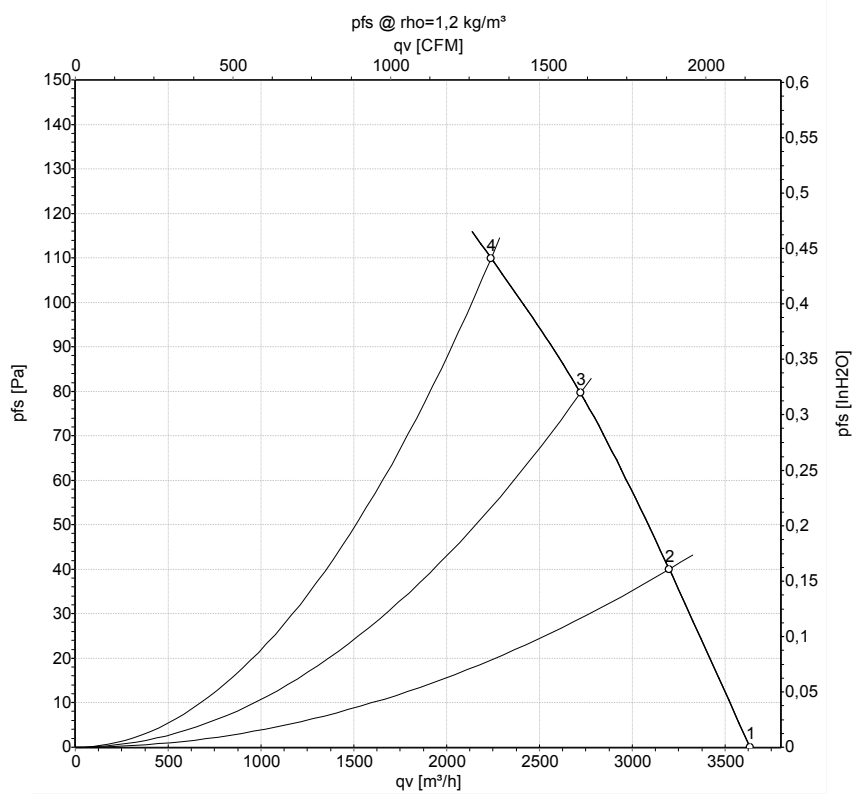

Measurement: LU-164986

Air performance measured as per ISO 5801 Installation category A. For detailed information on the measuring set-up, please contact ebm-papst. Suction-side noise levels: LwA measured as per ISO 13347 / LpA measured with 1m distance to fan axis. The values given are valid under the measuring conditions mentioned above and may vary according to the actual installation situation. With any deviation from the standard set-up, the specific values have to be checked and reviewed with the unit installed.

Measured values

	Conn.	U	f	n	P_e	I	qv	p_{fs}
		V	Hz	min^{-1}	W	A	m^3/h	Pa
1	Y	460	60	1640	195	0.35	3635	0
2	Y	460	60	1620	212	0.36	3200	40
3	Y	460	60	1605	226	0.37	2720	80
4	Y	460	60	1600	255	0.42	2240	110

Conn. = Connection · U = Supply voltage · f = Frequency · n = Speed · P_e = Power input · I = Current draw · qv = Air flow · p_{fs} = Pressure increase

ebm-papst Mulfingen GmbH & Co. KG · Bachmühle 2 · D-74673 Mulfingen · Phone +49 (0) 7938 81-0 · Fax +49 (0) 7938 81-110 · info1@de.ebmpapst.com · www.ebmpapst.com