W4D500-GM19-14

AC axial fan - HyBlade

sickled blades (S series)

with full square nozzle

ebm-papst Mulfingen GmbH & Co. KG
Bachmühle 2 · D-74673 Mulfingen
Phone +49 7938 81-0
Fax +49 7938 81-110
info1@de.ebmpapst.com
www.ebmpapst.com

Limited partnership · Headquarters Mulfingen
County court Stuttgart · HRA 590344

General partner Elektrobau Mulfingen GmbH · Headquarters Mulfingen
County court Stuttgart · HRB 590142

Nominal data

Type	**W4D500-GM19-14**
Motor	**M4D110-GF**

Phase		3~	3~
Nominal voltage	VAC	332	575
Connection		Δ	Y
Frequency	Hz	60	60
Type of data definition		ml	ml
Valid for approval / standard		CE	CE
Speed	min^{-1}	1600	1600
Power input	W	1020	1020
Current draw	A	2.1	1.21
Max. back pressure	Pa	100	100
Min. ambient temperature	°C	-40	-40
Max. ambient temperature	°C	65	65

ml = Max. load · me = Max. efficiency · fa = Running at free air · cs = Customer specs · cu = Customer unit
Subject to alterations

AC axial fan - HyBlade

sickled blades (S series)

with full square nozzle

Technical features

Mass	16.8 kg
Size	500 mm
Surface of rotor	Coated in black
Material of terminal box	PC / ABS plastic
Material of blades	Press-fitted sheet steel blank, sprayed with PP plastic
Material of wall ring	Sheet steel, galvanised and coated in black plastic (RAL 9005)
Material of guard grille	Steel, coated in black plastic (RAL9005)
Number of blades	5
Direction of air flow	"V"
Direction of rotation	Counter-clockwise, seen on rotor
Type of protection	IP 54
Insulation class	"F"
Humidity class	F4-1
Max. permissible ambient motor temp. (transp./ storage)	+ 80 °C
Min. permissible ambient motor temp. (transp./storage)	- 40 °C
Mounting position	Shaft horizontal or rotor on bottom; rotor on top on request
Condensate discharge holes	Rotor-side
Operation mode	S1
Motor bearing	Ball bearing
Touch current acc. IEC 60990 (measuring network Fig. 4, TN system)	<= 3.5 mA
Electrical leads	Via terminal box
Motor protection	Thermal overload protector (TOP) brought out
Protection class	I (if protective earth is connected by customer)
Product conforming to standard	EN 61800-5-1; CE
Approval	EAC; VDE; UL 1004-1; CSA C22.2 Nr.100

ebm-papst Mulfingen GmbH & Co. KG · Bachmühle 2 · D-74673 Mulfingen · Phone +49 (0) 7938 81-0 · Fax +49 (0) 7938 81-110 · info1@de.ebmpapst.com · www.ebmpapst.com

AC axial fan - HyBlade

sickled blades (S series)

with full square nozzle

Product drawing

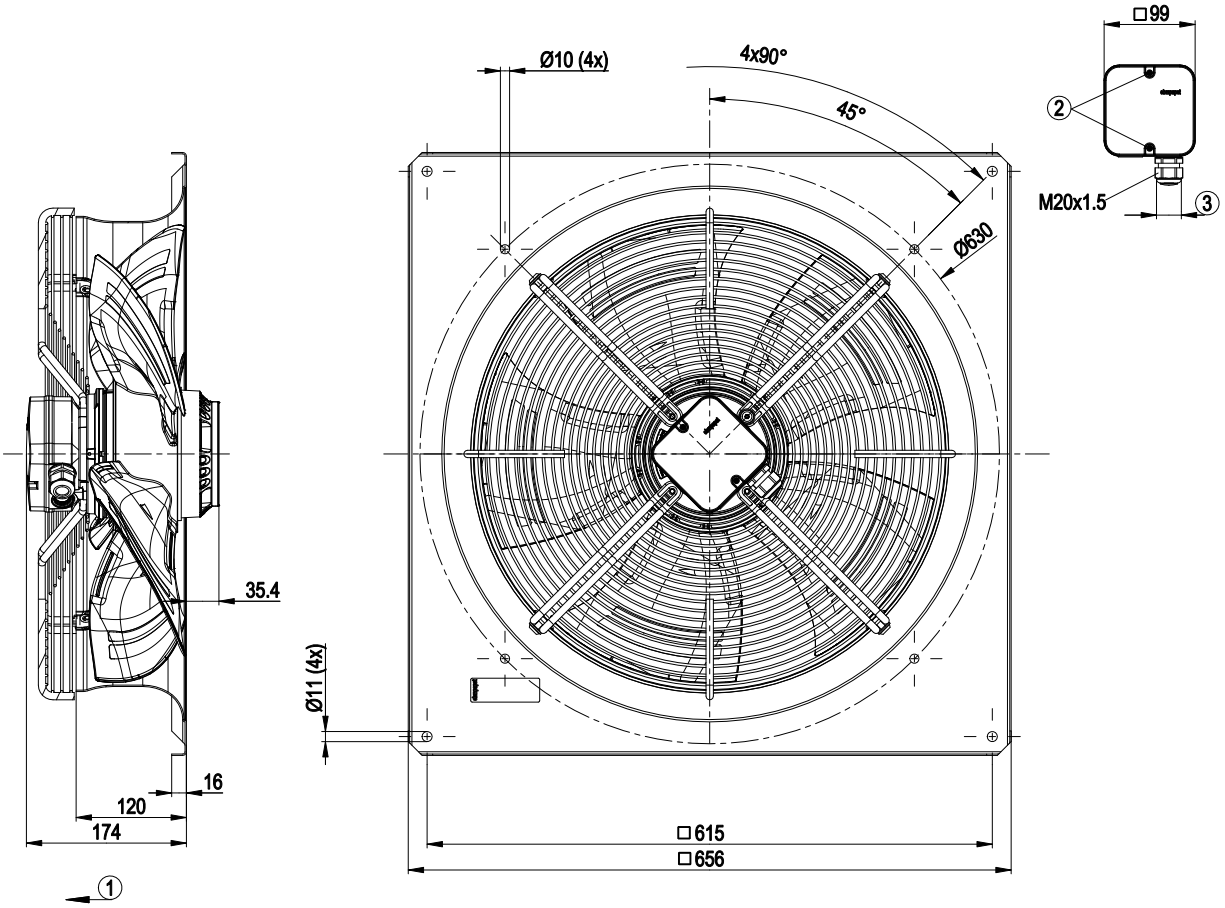

1	Direction of air flow "V"
2	Tightening torque 1.5±0.2 Nm
3	Cable diameter: min. 6 mm, max. 12 mm, tightening torque 2±0.3 Nm

ebm-papst Mulfingen GmbH & Co. KG · Bachmühle 2 · D-74673 Mulfingen · Phone +49 (0) 7938 81-0 · Fax +49 (0) 7938 81-110 · info1@de.ebmpapst.com · www.ebmpapst.com

AC axial fan - HyBlade

sickled blades (S series)

with full square nozzle

Connection screen

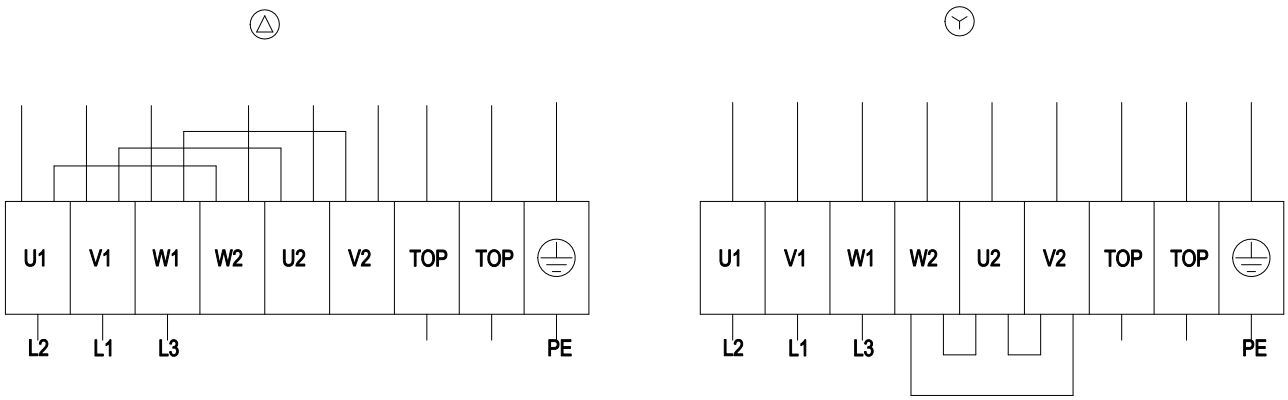

Δ	Delta connection	Y	Star connection	L1	= V1 = blue
L2	= U1 = black	L3	= W1 = brown	W2	yellow
U2	green	V2	white	TOP	2 x grey
PE	green/yellow				

ebm-papst Mulfingen GmbH & Co. KG · Bachmühle 2 · D-74673 Mulfingen · Phone +49 (0) 7938 81-0 · Fax +49 (0) 7938 81-110 · info1@de.ebmpapst.com · www.ebmpapst.com

AC axial fan - HyBlade

sickled blades (S series)

with full square nozzle

Charts: Air flow 60 Hz

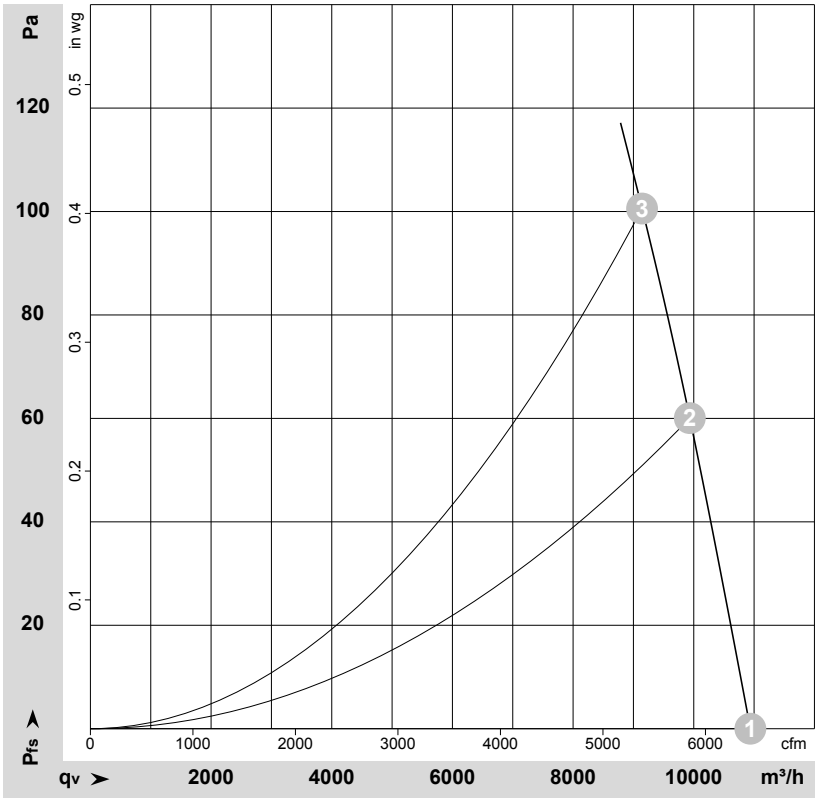

ρ = 1,15 kg/m³ ± 2%

Measurement: LU-167461

Air performance measured as per ISO 5801 Installation category A. For detailed information on the measuring set-up, please contact ebm-papst. Suction-side noise levels: LwA measured as per ISO 13347 / LpA measured with 1m distance to fan axis. The values given are valid under the measuring conditions mentioned above and may vary according to the actual installation situation. With any deviation from the standard set-up, the specific values have to be checked and reviewed with the unit installed.

Measured values

	Conn.	U	f	n	P_e	I	qv	p_{fs}
		V	Hz	min^{-1}	W	A	m^3/h	Pa
1	Y	575	60	1640	877	1.07	10940	0
2	Y	575	60	1615	965	1.16	9935	60
3	Y	575	60	1600	1020	1.21	9145	100

Conn. = Connection · U = Supply voltage · f = Frequency · n = Speed · P_e = Power input · I = Current draw · qv = Air flow · p_{fs} = Pressure increase

ebm-papst Mulfingen GmbH & Co. KG · Bachmühle 2 · D-74673 Mulfingen · Phone +49 (0) 7938 81-0 · Fax +49 (0) 7938 81-110 · info1@de.ebmpapst.com · www.ebmpapst.com