AC axial fan - HyBlade

sickled blades (S series), single inlet

ebm-papst Mulfingen GmbH & Co. KG
Bachmühle 2 · D-74673 Mulfingen
Phone +49 7938 81-0
Fax +49 7938 81-110
info1@de.ebmpapst.com
www.ebmpapst.com

Limited partnership · Headquarters Mulfingen
County court Stuttgart · HRA 590344

General partner Elektrobau Mulfingen GmbH · Headquarters Mulfingen
County court Stuttgart · HRB 590142

ErP2015 EXCEEDS THE NORM

Nominal data

Type	**W4E500-IM03-01**
Motor	**M4E110-GF**

Phase		1~	1~
Nominal voltage	VAC	230	230
Frequency	Hz	50	60
Type of data definition		ml	ml
Valid for approval / standard		CE	CE
Speed	min^{-1}	1300	1400
Power input	W	680	880
Current draw	A	3.0	3.88
Motor capacitor	µF	12	12
Capacitor voltage	VDB	450	450
Max. back pressure	Pa	150	100
Min. ambient temperature	°C	-40	-40
Max. ambient temperature	°C	65	40

ml = Max. load · me = Max. efficiency · fa = Running at free air · cs = Customer specs · cu = Customer unit
Subject to alterations

Data according to ErP directive

		Actual	Request 2015
01 Overall efficiency η_{es}	%	32.5	32.5
02 Measurement category		A	
03 Efficiency category		Static	
04 Efficiency grade N		40	40
05 Variable speed drive		No	

09 Power input P_e	kW	0.65
09 Air flow q_v	m^3/h	5765
09 Pressure increase p_{fs}	Pa	129
10 Speed n	min^{-1}	1315
11 Specific ratio*		1.00

Data definition with optimum efficiency.
The ErP data is determined using a motor-impeller combination in a standardised measurement configuration.

* Specific ratio = 1 + p_{fs} / 100 000 Pa

LU-107128

AC axial fan - HyBlade

sickled blades (S series), single inlet

Technical features

Mass	15.2 kg
Size	500 mm
Surface of rotor	Coated in black
Material of terminal box	ABS plastic, black
Material of blades	Press-fitted sheet steel blank, sprayed with PP plastic
Material of mounting ring	Steel, phosphated and coated in black plastic
Material of wall ring	Sheet steel, pre-galvanised and coated in black plastic
Number of blades	5
Direction of air flow	"V"
Direction of rotation	Counter-clockwise, seen on rotor
Type of protection	IP 54
Insulation class	"F"
Humidity class	F3-1
Max. permissible ambient motor temp. (transp./ storage)	+ 80 °C
Min. permissible ambient motor temp. (transp./storage)	- 40 °C
Mounting position	Shaft horizontal or rotor on bottom; rotor on top on request
Condensate discharge holes	Rotor-side
Operation mode	S1
Motor bearing	Ball bearing
Touch current acc. IEC 60990 (measuring network Fig. 4, TN system)	<= 3.5 mA
Electrical leads	Via terminal box, integrated capacitor connected via terminal box
Motor protection	Thermal overload protector (TOP) brought out
Cable exit	Variable
Protection class	I (if protective earth is connected by customer)
Motor capacitor according to EN 60252-1 in safety protection class	P0/S0
Product conforming to standard	EN 61800-5-1; CE
Approval	VDE; EAC

ebm-papst Mulfingen GmbH & Co. KG · Bachmühle 2 · D-74673 Mulfingen · Phone +49 (0) 7938 81-0 · Fax +49 (0) 7938 81-110 · info1@de.ebmpapst.com · www.ebmpapst.com

AC axial fan - HyBlade

sickled blades (S series), single inlet

Product drawing

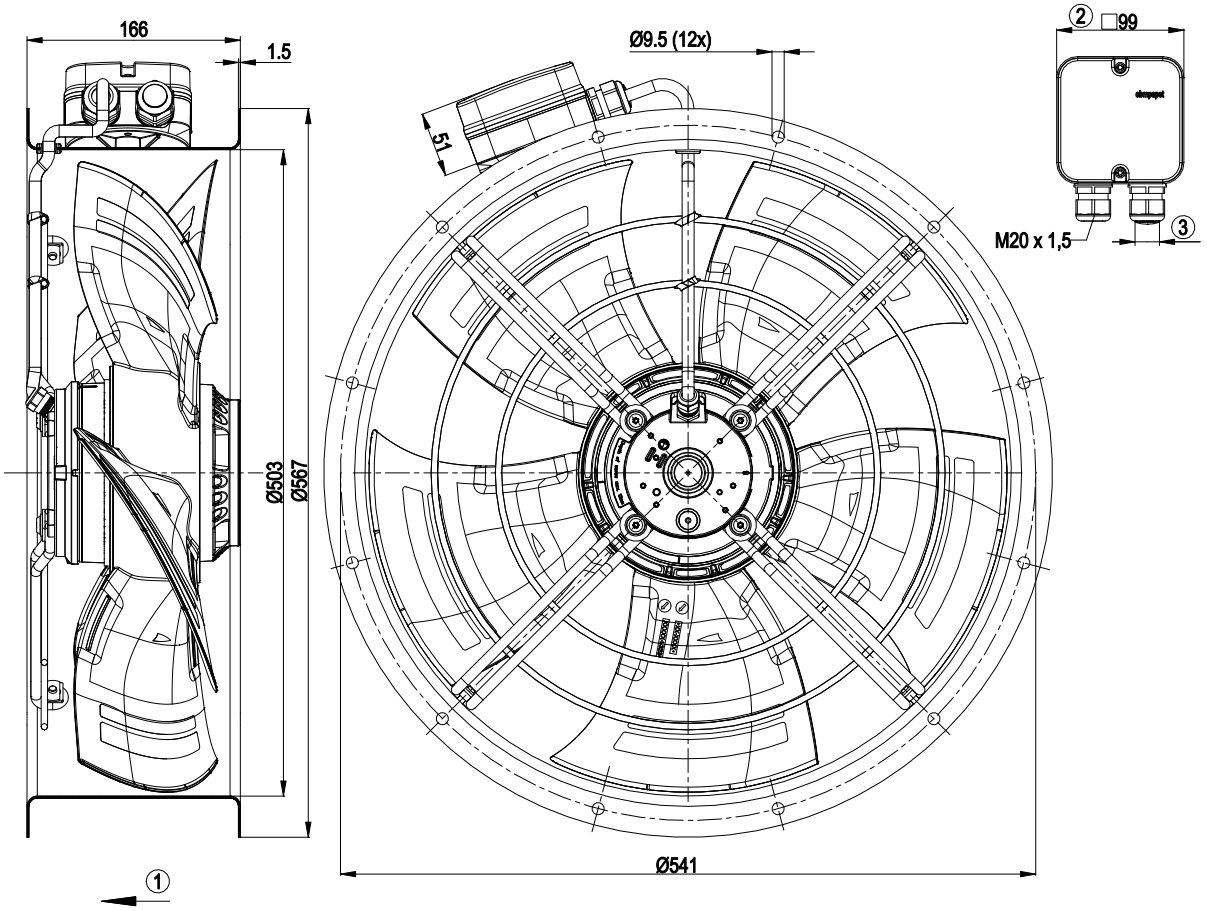

1	Direction of air flow "V"
2	Tightening torque 1.5±0.2 Nm
4	Cable diameter: min. 6 mm, max. 12 mm, tightening torque: 2±0.3 Nm

ebm-papst Mulfingen GmbH & Co. KG · Bachmühle 2 · D-74673 Mulfingen · Phone +49 (0) 7938 81-0 · Fax +49 (0) 7938 81-110 · info1@de.ebmpapst.com · www.ebmpapst.com

AC axial fan - HyBlade

sickled blades (S series), single inlet

Connection screen

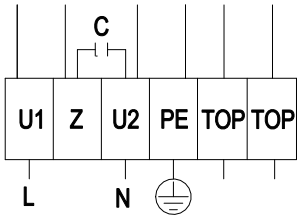

L	= U1 = blue	Z	brown	N	= U2 = black
PE	green / yellow	TOP	grey		

ebm-papst Mulfingen GmbH & Co. KG · Bachmühle 2 · D-74673 Mulfingen · Phone +49 (0) 7938 81-0 · Fax +49 (0) 7938 81-110 · info1@de.ebmpapst.com · www.ebmpapst.com

AC axial fan - HyBlade

sickled blades (S series), single inlet

Charts: Air flow 50 Hz

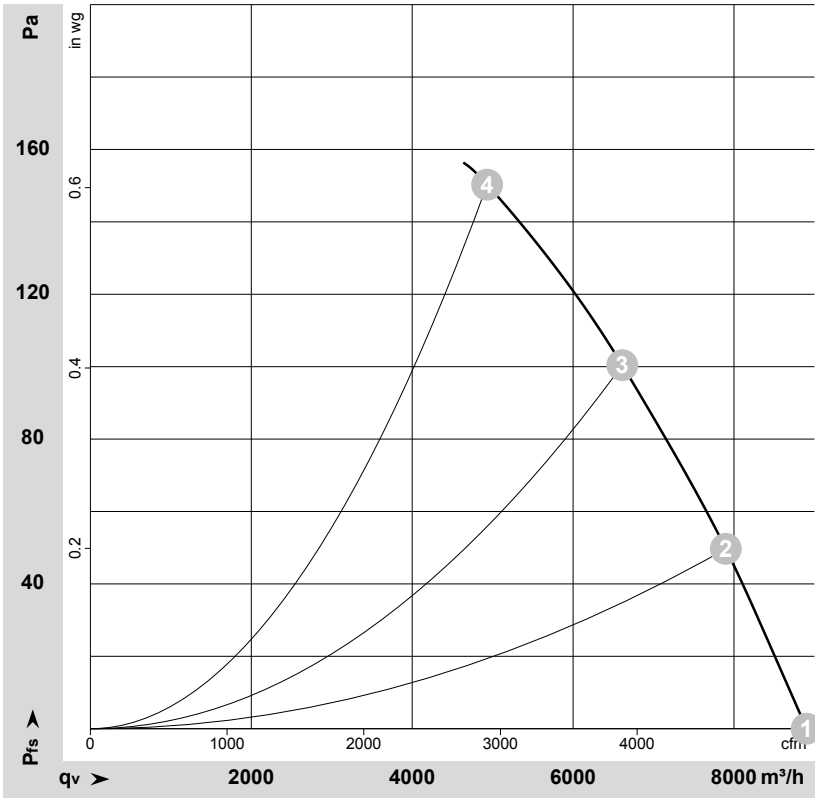

ρ = 1,15 kg/m³ ± 2%

Measurement: LU-107128

Air performance measured as per ISO 5801 Installation category A. For detailed information on the measuring set-up, please contact ebm-papst. Suction-side noise levels: LwA measured as per ISO 13347 / LpA measured with 1m distance to fan axis. The values given are valid under the measuring conditions mentioned above and may vary according to the actual installation situation. With any deviation from the standard set-up, the specific values have to be checked and reviewed with the unit installed.

Measured values

	U	f	n	P_e	I	LpA_{in}	LwA_{in}	LwA_{out}	qv	p_{fs}
	V	Hz	min^{-1}	W	A	dB(A)	dB(A)	dB(A)	m^3/h	Pa
1	230	50	1380	513	2.25	68	75	75	8905	0
2	230	50	1355	572	2.51	65	72	72	7900	50
3	230	50	1330	626	2.74	63	70	70	6610	100
4	230	50	1300	680	3.00	66	73	73	4930	150

U = Supply voltage · f = Frequency · n = Speed · P_e = Power input · I = Current draw · LpA_{in} = Sound pressure level inlet side · LwA_{in} = Sound power level inlet side · LwA_{out} = Sound power level outlet side
qv = Air flow · p_{fs} = Pressure increase

ebm-papst Mulfingen GmbH & Co. KG · Bachmühle 2 · D-74673 Mulfingen · Phone +49 (0) 7938 81-0 · Fax +49 (0) 7938 81-110 · info1@de.ebmpapst.com · www.ebmpapst.com

AC axial fan - HyBlade

sickled blades (S series), single inlet

Charts: Air flow 60 Hz

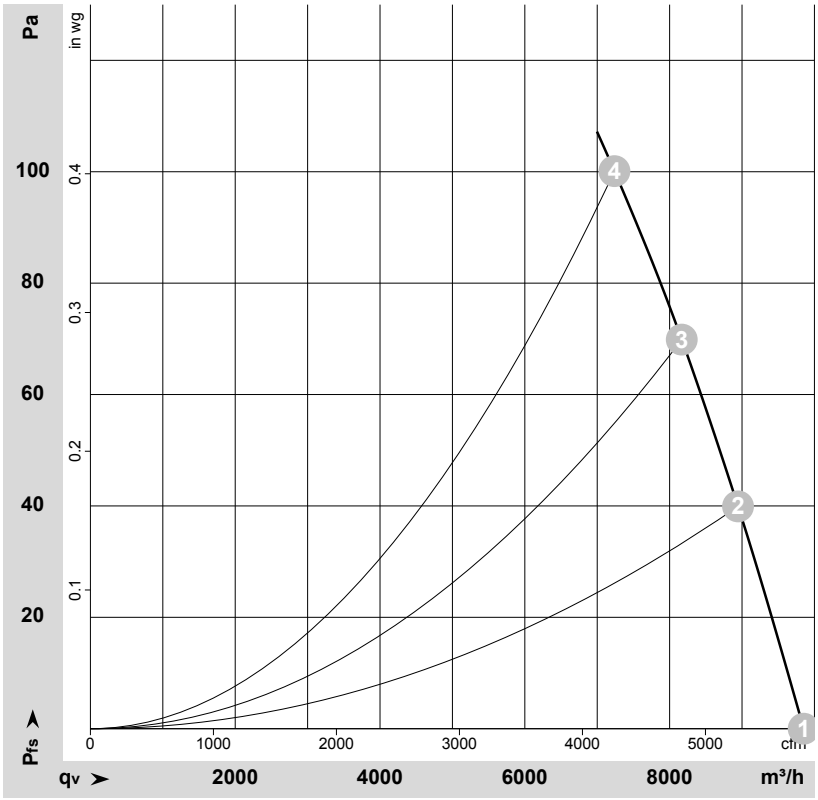

ρ = 1,15 kg/m³ ± 2%

Measurement: LU-107130

Air performance measured as per ISO 5801 Installation category A. For detailed information on the measuring set-up, please contact ebm-papst. Suction-side noise levels: LwA measured as per ISO 13347 / LpA measured with 1m distance to fan axis. The values given are valid under the measuring conditions mentioned above and may vary according to the actual installation situation. With any deviation from the standard set-up, the specific values have to be checked and reviewed with the unit installed.

Measured values

	U	f	n	P_e	I	LpA_{in}	LwA_{in}	LwA_{out}	qv	p_{fs}
	V	Hz	min^{-1}	W	A	dB(A)	dB(A)	dB(A)	m^3/h	Pa
1	230	60	1530	793	3.45	70	77	78	9850	0
2	230	60	1485	830	3.62	68	75	75	8945	40
3	230	60	1445	854	3.74	66	73	73	8170	70
4	230	60	1400	880	3.88	65	71	71	7240	100

U = Supply voltage · f = Frequency · n = Speed · P_e = Power input · I = Current draw · LpA_{in} = Sound pressure level inlet side · LwA_{in} = Sound power level inlet side · LwA_{out} = Sound power level outlet side
qv = Air flow · p_{fs} = Pressure increase

ebm-papst Mulfingen GmbH & Co. KG · Bachmühle 2 · D-74673 Mulfingen · Phone +49 (0) 7938 81-0 · Fax +49 (0) 7938 81-110 · info1@de.ebmpapst.com · www.ebmpapst.com