W6D800-DD01-02

AC axial fan - HyBlade

sickled blades (S series)

with full square nozzle

ebm-papst Mulfingen GmbH & Co. KG
Bachmühle 2 · D-74673 Mulfingen
Phone +49 7938 81-0
Fax +49 7938 81-110
info1@de.ebmpapst.com
www.ebmpapst.com

Limited partnership · Headquarters Mulfingen
County court Stuttgart · HRA 590344

General partner Elektrobau Mulfingen GmbH · Headquarters Mulfingen
County court Stuttgart · HRB 590142

ErP2015 EXCEEDS THE NORM

Nominal data

Type	**W6D800-DD01-02**
Motor	**M6D138-LA**

Phase		3~	3~
Nominal voltage	VAC	400	400
Connection		Δ	Y
Frequency	Hz	50	50
Type of data definition		ml	ml
Valid for approval / standard		CE	CE
Speed	min^{-1}	880	670
Power input	W	1940	1210
Current draw	A	3.9	2.23
Max. back pressure	Pa	160	92
Min. ambient temperature	°C	-40	-40
Max. ambient temperature	°C	60	60
Starting current	A	13	4.3

ml = Max. load · me = Max. efficiency · fa = Running at free air · cs = Customer specs · cu = Customer unit
Subject to alterations

Data according to ErP directive

		Actual	Request 2015
01 Overall efficiency η_{es}	%	35.2	35.2
02 Measurement category		A	
03 Efficiency category		Static	
04 Efficiency grade N		40	40
05 Variable speed drive		No	

09 Power input P_e	kW	1.72
09 Air flow q_v	m^3/h	17215
09 Pressure increase p_{fs}	Pa	124
10 Speed n	min^{-1}	905
11 Specific ratio*		1.00

Data definition with optimum efficiency.
The ErP data is determined using a motor-impeller combination in a standardised measurement configuration.

* Specific ratio = 1 + p_{fs} / 100 000 Pa

LU-122313

AC axial fan - HyBlade

sickled blades (S series)

with full square nozzle

Technical features

Mass	44.9 kg
Size	800 mm
Surface of rotor	Cast in aluminium
Material of terminal box	Plastic, fibreglass-reinforced
Material of blades	Aluminium sheet insert, sprayed with PP plastic
Material of wall ring	Sheet steel, pre-galvanised and coated in black plastic (RAL 9005)
Material of guard grille	Steel, coated in black plastic (RAL9005)
Number of blades	5
Blade angle	0°
Direction of air flow	"A"
Direction of rotation	Counter-clockwise, seen on rotor
Type of protection	IP 54
Insulation class	"F"
Humidity class	F3-1
Max. permissible ambient motor temp. (transp./ storage)	+80 °C
Min. permissible ambient motor temp. (transp./storage)	-40 °C
Mounting position	Any
Condensate discharge holes	On rotor and stator sides
Operation mode	S1
Motor bearing	Ball bearing
Touch current acc. IEC 60990 (measuring network Fig. 4, TN system)	<= 3.5 mA
Electrical leads	Via terminal box
Motor protection	Thermal overload protector (TOP) brought out
Cable exit	Axial
Protection class	I (if protective earth is connected by customer)
Product conforming to standard	EN 61800-5-1; EN 60034; CE
Approval	VDE; EAC

ebm-papst Mulfingen GmbH & Co. KG · Bachmühle 2 · D-74673 Mulfingen · Phone +49 (0) 7938 81-0 · Fax +49 (0) 7938 81-110 · info1@de.ebmpapst.com · www.ebmpapst.com

AC axial fan - HyBlade

sickled blades (S series)

with full square nozzle

Product drawing

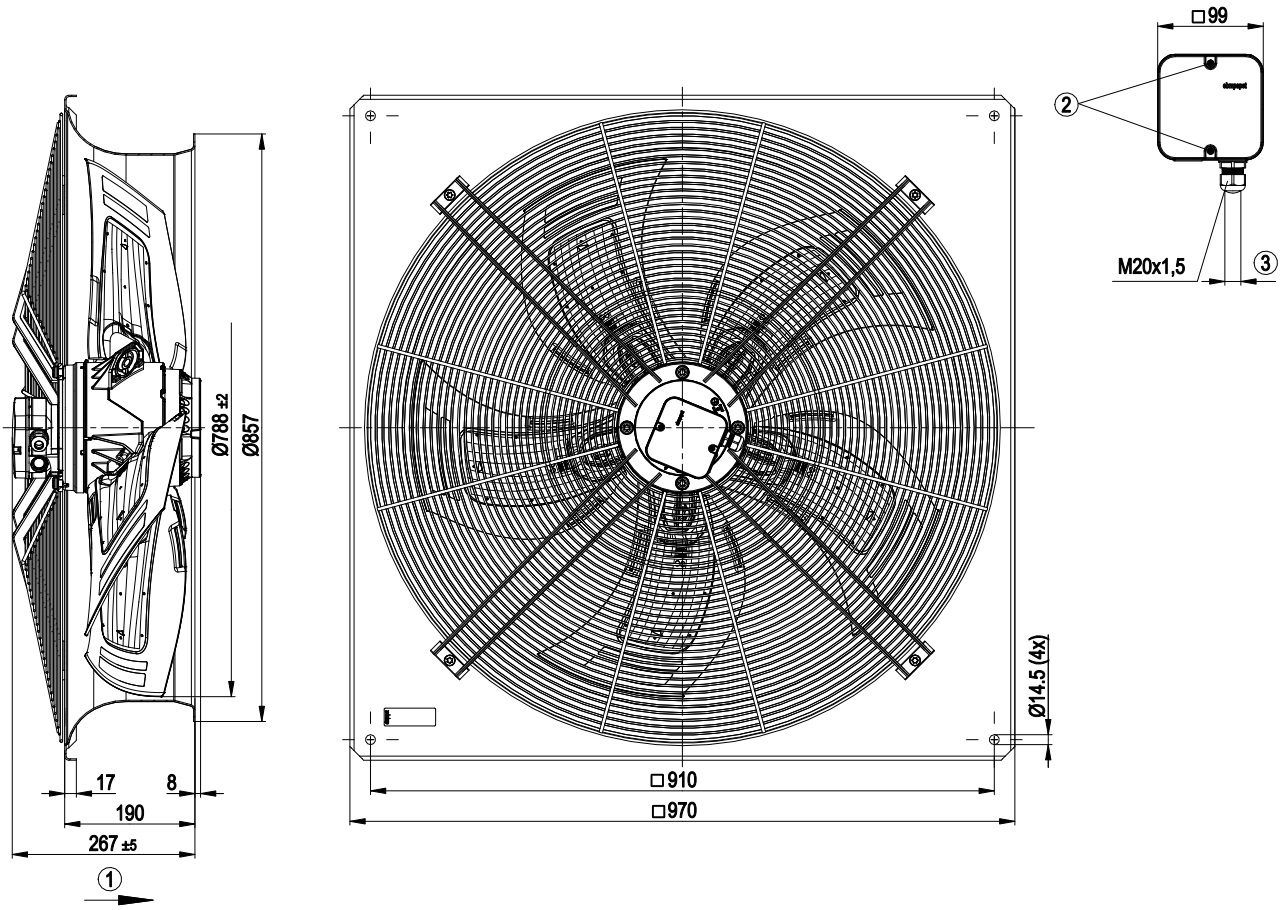

1	Direction of air flow "A"
2	Tightening torque 1.5±0.2 Nm
3	Cable diameter: min. 7 mm, max. 14 mm, tightening torque: 2±0.3 Nm

ebm-papst Mulfingen GmbH & Co. KG · Bachmühle 2 · D-74673 Mulfingen · Phone +49 (0) 7938 81-0 · Fax +49 (0) 7938 81-110 · info1@de.ebmpapst.com · www.ebmpapst.com

AC axial fan - HyBlade

sickled blades (S series)

with full square nozzle

Connection screen

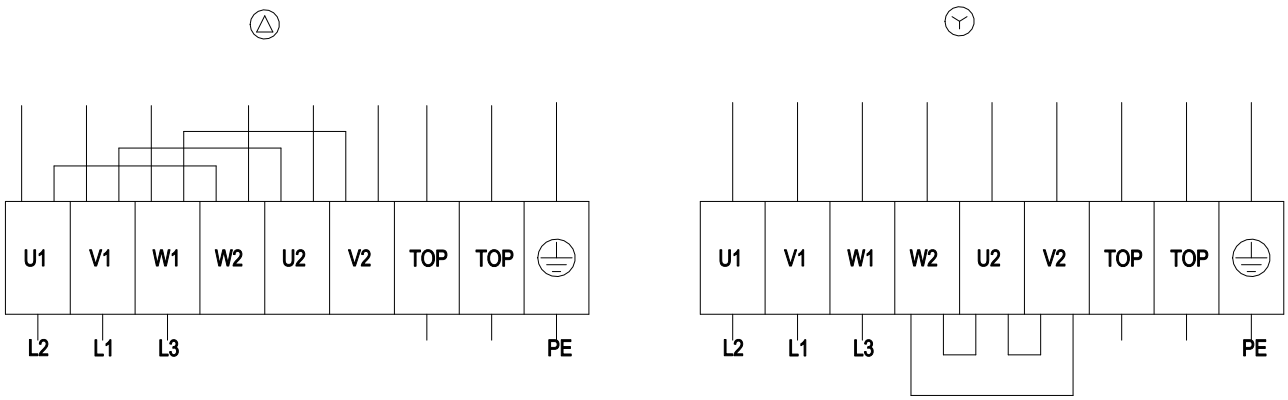

Δ	Delta connection	Y	Star connection	L1	= V1 = blue
L2	= U1 = black	L3	= W1 = brown	W2	yellow
U2	green	V2	white	TOP	2 x grey
PE	green/yellow				

ebm-papst Mulfingen GmbH & Co. KG · Bachmühle 2 · D-74673 Mulfingen · Phone +49 (0) 7938 81-0 · Fax +49 (0) 7938 81-110 · info1@de.ebmpapst.com · www.ebmpapst.com

AC axial fan - HyBlade

sickled blades (S series)

with full square nozzle

Charts: Air flow 50 Hz

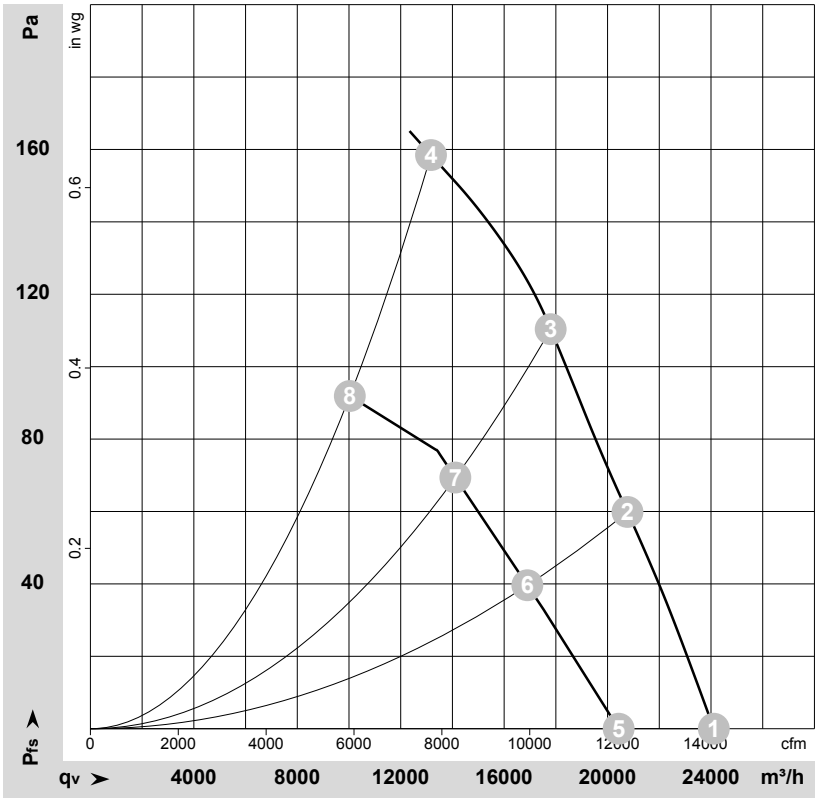

ρ = 1,15 kg/m³ ± 2%

Measurement: LU-113998
Measurement: LU-115288

Air performance measured as per ISO 5801 Installation category A. For detailed information on the measuring set-up, please contact ebm-papst. Suction-side noise levels: LwA measured as per ISO 13347 / LpA measured with 1m distance to fan axis. The values given are valid under the measuring conditions mentioned above and may vary according to the actual installation situation. With any deviation from the standard set-up, the specific values have to be checked and reviewed with the unit installed.

Measured values

	Conn.	U	f	n	P_e	I	LpA_{in}	LwA_{in}	LwA_{out}	qv	p_{fs}
		V	Hz	min^{-1}	W	A	dB(A)	dB(A)	dB(A)	m^3/h	Pa
1	Δ	400	50	925	1380	3.30	65	72	72	24110	0
2	Δ	400	50	910	1585	3.44	65	72	71	20770	60
3	Δ	400	50	900	1725	3.61	67	73	72	17800	110
4	Δ	400	50	880	1940	3.90	70	77	77	13170	160
5	Y	400	50	780	1000	1.85	61	68	67	20430	0
6	Y	400	50	735	1080	1.98	60	66	66	16895	40
7	Y	400	50	710	1133	2.08	60	67	66	14115	69
8	Y	400	50	670	1210	2.23	63	70	69	10030	92

Conn. = Connection · U = Supply voltage · f = Frequency · n = Speed · P_e = Power input · I = Current draw · LpA_{in} = Sound pressure level inlet side · LwA_{in} = Sound power level inlet side
LwA_{out} = Sound power level outlet side · qv = Air flow · p_{fs} = Pressure increase

ebm-papst Mulfingen GmbH & Co. KG · Bachmühle 2 · D-74673 Mulfingen · Phone +49 (0) 7938 81-0 · Fax +49 (0) 7938 81-110 · info1@de.ebmpapst.com · www.ebmpapst.com