D2D133-DB02-06

AC centrifugal fan

forward-curved, dual-intake

with housing (flange)

ebm-papst Mulfingen GmbH & Co. KG
Bachmühle 2 · D-74673 Mulfingen
Phone +49 7938 81-0
Fax +49 7938 81-110
info1@de.ebmpapst.com
www.ebmpapst.com

Limited partnership · Headquarters Mulfingen
Amtsgericht (court of registration) Stuttgart · HRA 590344

General partner Elektrobau Mulfingen GmbH · Headquarters Mulfingen
Amtsgericht (court of registration) Stuttgart · HRB 590142

ErP2015 EXCEEDS THE NORM

Nominal data

Type	**D2D133-DB02-06**
Motor	**M2D068-DF**

Phase		3~
Nominal voltage	VAC	380
Frequency	Hz	50
Valid for approval/standard		CE
Speed	min^{-1}	2100
Power consumption	W	245
Current draw	A	0.4
Min. ambient temperature	°C	-25
Max. ambient temperature	°C	-

ml = Max. load · me = Max. efficiency · fa = Free air · cs = Customer specification · ce = Customer equipment
Subject to change

Data according to ErP Directive

		Actual	Req. 2015
01 Overall efficiency η_{es}	%	33.4	32.1
02 Measurement category		A	
03 Efficiency category		Static	
04 Efficiency grade N		45.3	44
05 Variable speed drive		No	

09 Power consumption P_e	kW	0.13
09 Air flow q_v	m^3/h	500
09 Pressure increase p_{fs}	Pa	324
10 Speed n	min^{-1}	2530
11 Specific ratio*		1.00

Data obtained at optimum efficiency level.
The ErP data is determined using a motor-impeller combination in a standardized measurement setup.

* Specific ratio = 1 + p_{fs} / 100 000 Pa

LU-62666

AC centrifugal fan

forward-curved, dual-intake

with housing (flange)

Technical description

Weight	4.2 kg
Fan size	133 mm
Rotor surface	Unpainted
Impeller material	Sheet steel, galvanized
Housing material	Sheet steel, galvanized
Motor suspension	Motor mounted with brackets on one side
Direction of rotation	Clockwise, viewed toward rotor
Degree of protection	IP44; installation- and position-dependent
Insulation class	"F"
Moisture (F) / Environmental (H) protection class	F1-1
Max. permitted ambient temp. for motor (transport/storage)	+ 80 °C
Min. permitted ambient temp. for motor (transport/storage)	- 40 °C
Installation position	Any
Condensation drainage holes	None
Mode	S1
Motor storage	Ball bearing
Touch current according to IEC 60990 (measuring circuit Fig. 4, TN system)	< 0.75 mA
Motor protection	Thermal overload protector (TOP) externally wired
Protection class	I (with customer connection of protective earth)
Conformity with standards	EN 60335-1; CE
Approval	CCC

ebm-papst Mulfingen GmbH & Co. KG · Bachmühle 2 · D-74673 Mulfingen · Phone +49 (0) 7938 81-0 · Fax +49 (0) 7938 81-110 · info1@de.ebmpapst.com · www.ebmpapst.com

AC centrifugal fan

forward-curved, dual-intake

with housing (flange)

Product drawing

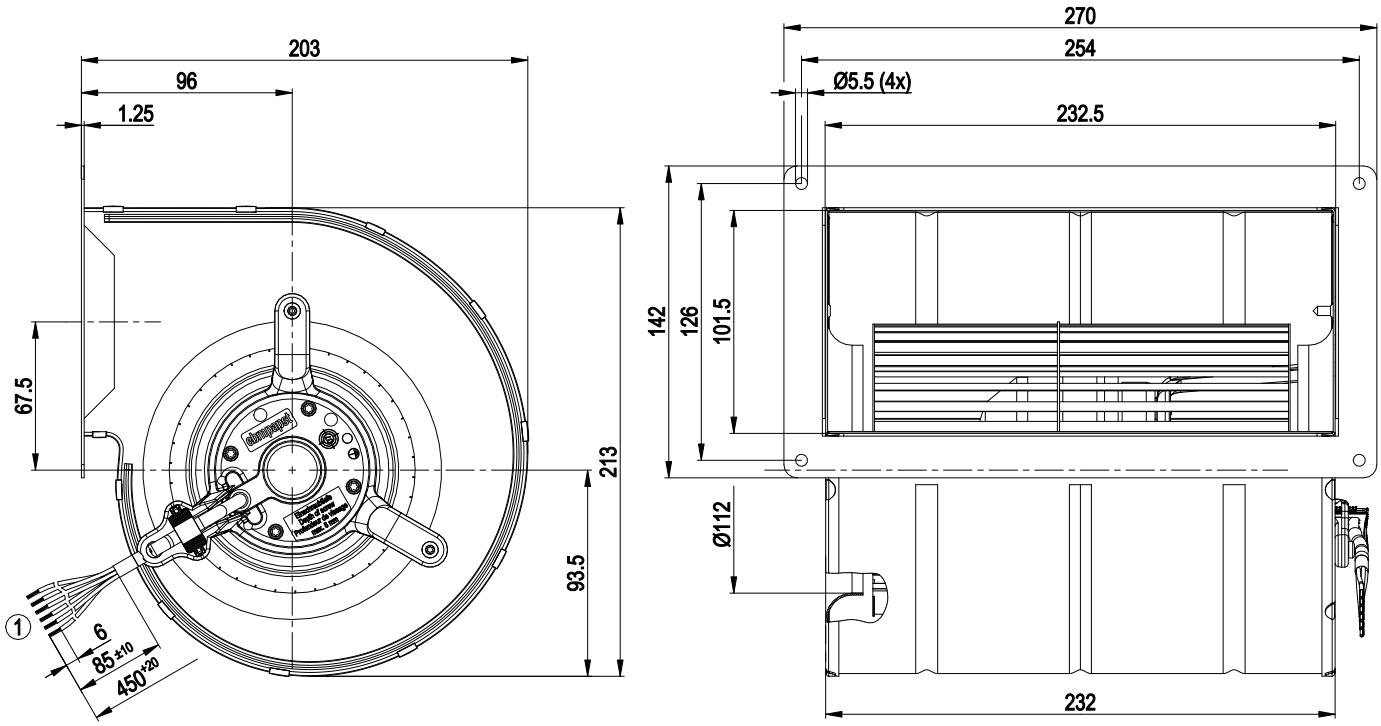

1	Cable halogen-silicone-free 6G 0.5 mm², 6x crimped splices

ebm-papst Mulfingen GmbH & Co. KG · Bachmühle 2 · D-74673 Mulfingen · Phone +49 (0) 7938 81-0 · Fax +49 (0) 7938 81-110 · info1@de.ebmpapst.com · www.ebmpapst.com

AC centrifugal fan

forward-curved, dual-intake

with housing (flange)

Connection diagram

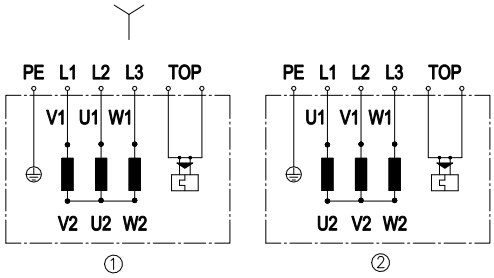

Change of rotation direction by reversing two phases

	Three-phase motor
Y	Star connection
1	Counterclockwise operation
L1	= V1 = blue
L2	= U1 = black
L3	= W1 = brown
2	Clockwise operation
L1	= U1 = black
L2	= V1 = blue
L3	= W1 = brown
PE	Green/yellow
TOP	2x gray

ebm-papst Mulfingen GmbH & Co. KG · Bachmühle 2 · D-74673 Mulfingen · Phone +49 (0) 7938 81-0 · Fax +49 (0) 7938 81-110 · info1@de.ebmpapst.com · www.ebmpapst.com

AC centrifugal fan

forward-curved, dual-intake

with housing (flange)

Curves: Air performance 50 Hz

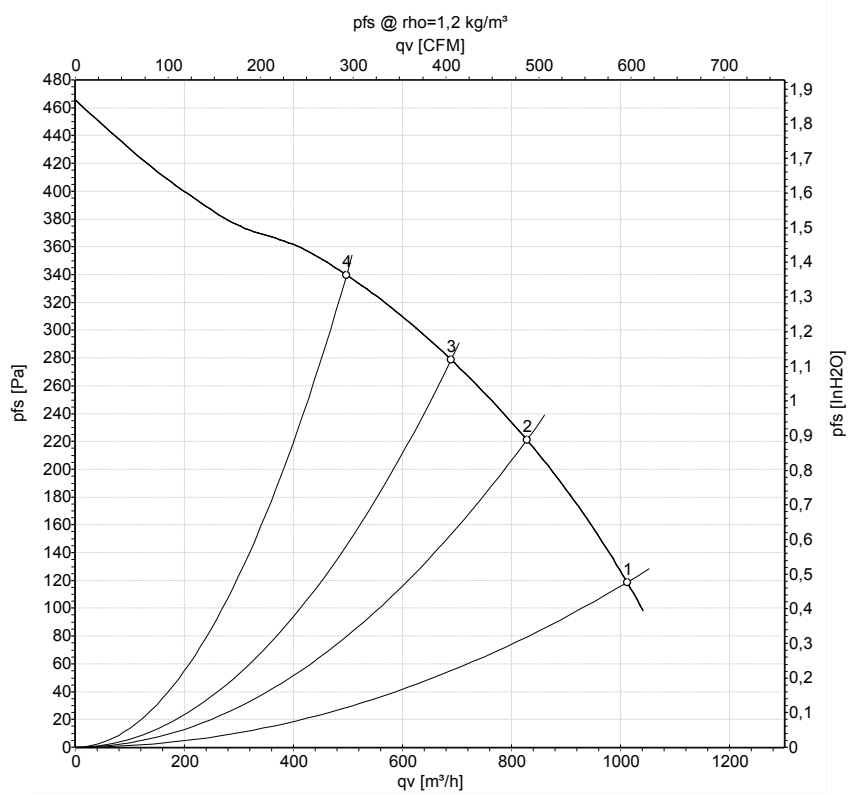

Measurement: LU-62666

Air performance measured according to ISO 5801 installation category A. For detailed information on the measurement setup, contact ebm-papst. Intake sound level: Sound power level according to ISO 13347 / sound pressure level measured at 1 m distance from fan axis. The values given are valid under the specified measuring conditions and may vary due to conditions of installation. For deviations from the standard configuration, the parameters have to be checked on the installed unit.

Measured values

	U	f	n	P_e	I	qv	p_{fs}
	V	Hz	min^{-1}	W	A	m^3/h	Pa
1	380	50	2100	245	0.40	1010	120
2	380	50	2180	206	0.34	830	220
3	380	50	2335	176	0.30	690	280
4	380	50	2530	134	0.24	495	340

U = Power supply · f = Frequency · n = Speed · P_e = Power consumption · I = Current draw · qv = Air flow · p_{fs} = Pressure increase

ebm-papst Mulfingen GmbH & Co. KG · Bachmühle 2 · D-74673 Mulfingen · Phone +49 (0) 7938 81-0 · Fax +49 (0) 7938 81-110 · info1@de.ebmpapst.com · www.ebmpapst.com