5114 N

DC axial compact fan



ebm-papst St. Georgen GmbH & Co. KG
Hermann-Papst-Str. 1
D-78112 St. Georgen
Phone +49 (0) 7724 81-0
Fax +49 (0) 7724 81-1309
info2@de.ebmpapst.com
www.ebmpapst.com

Nominal data

Type	5114 N	
Nominal voltage	VDC	24
Nominal voltage range	VDC	12 .. 30
Speed	min^{-1}	2900
Power input	W	9.5
Min. ambient temperature	°C	-25
Max. ambient temperature	°C	72
Air flow	m^3/h	260
Sound power level	B	6.1
Sound pressure level	dB(A)	48

ml = Max. load · me = Max. efficiency · fa = Running at free air · cs = Customer specs · cu = Customer unit
Subject to alterations

DC axial compact fan

Technical features

General description	* Free air power consumption, these values may be considerably higher at the operating point.
Mass	0.650 kg
Dimensions	135 x 135 x 38 mm
Material of impeller	Sheet steel, coated in black
Housing material	Die-cast aluminium
Direction of air flow	Air exhaust over bars
Direction of rotation	Left, looking at rotor
Bearing	Ball bearings
Lifetime L10 at 40 °C	80000 h
Lifetime L10 at maximum temperature	37500 h
Connection line	Single strands AWG 22, TR 64, bared and tin-plated.
Motor protection	Protected against reverse polarity and locking.
Locked-rotor protection	Electronic blocking protection
Approval	CE
Option	Speed signal

ebm-papst St. Georgen GmbH & Co. KG · Hermann-Papst-Str. 1 · D-78112 St. Georgen · Phone +49 (0) 7724 81-0 · Fax +49 (0) 7724 81-1309 · info2@de.ebmpapst.com · www.ebmpapst.com

DC axial compact fan

Product drawing

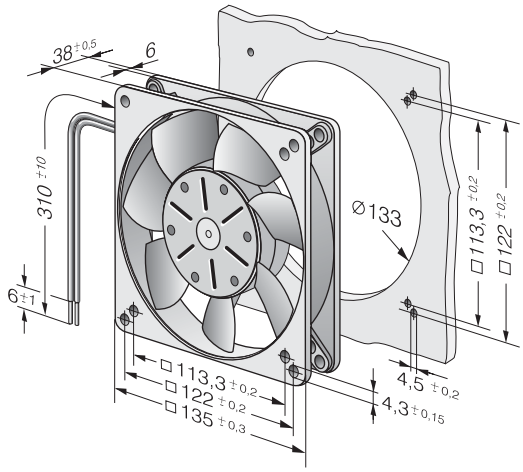

ebm-papst St. Georgen GmbH & Co. KG · Hermann-Papst-Str. 1 · D-78112 St. Georgen · Phone +49 (0) 7724 81-0 · Fax +49 (0) 7724 81-1309 · info2@de.ebmpapst.com · www.ebmpapst.com

DC axial compact fan

Charts: Air flow

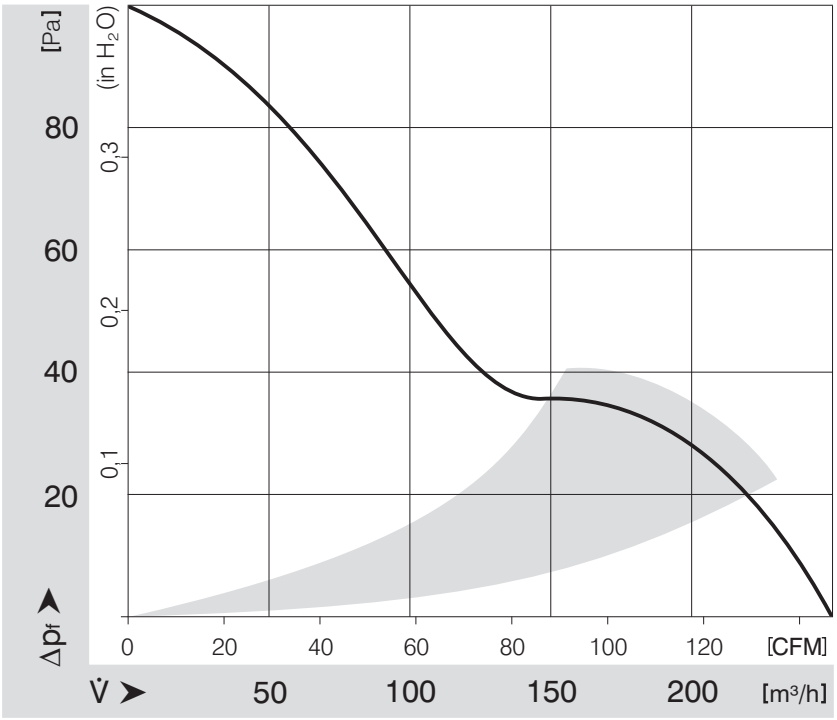

ebm-papst St. Georgen GmbH & Co. KG · Hermann-Papst-Str. 1 · D-78112 St. Georgen · Phone +49 (0) 7724 81-0 · Fax +49 (0) 7724 81-1309 · info2@de.ebmpapst.com · www.ebmpapst.com