5318 /2HP

DC axial fan



ebm-papst St. Georgen GmbH & Co. KG
Hermann-Papst-Str. 1
D-78112 St. Georgen
Phone +49 (0) 7724 81-0
Fax +49 (0) 7724 81-1309
info2@de.ebmpapst.com
www.ebmpapst.com

Nominal data

Type	5318 /2HP	
Nominal voltage	VDC	48
Nominal voltage range	VDC	36 .. 72
Speed	min^{-1}	5000
Power input	W	27
Min. ambient temperature	°C	-20
Max. ambient temperature	°C	65
Air flow	m^3/h	340
Sound power level	B	7.2
Sound pressure level	dB(A)	64

ml = Max. load · me = Max. efficiency · fa = Running at free air · cs = Customer specs · cu = Customer unit
Subject to alterations

Technical features

General description	Free air power consumption, these values may be considerably higher at the operating point.
Impeller material	Fibreglass-reinforced plastic (PA)
Mass	0.9 kg
Dimensions	140 x 140 x 51 mm
Housing material	Die-cast aluminium
Direction of air flow	Inlet over bars
Direction of rotation	Counter-clockwise, looking at rotor
Bearing	Ball bearing
Lifetime L10 at 40 °C	77500 h
Lifetime L10 at maximum temperature	40000 h
Connection line	With single strands AWG 22, TR 64

ebm-papst St. Georgen GmbH & Co. KG · Hermann-Papst-Str. 1 · D-78112 St. Georgen · Phone +49 (0) 7724 81-0 · Fax +49 (0) 7724 81-1309 · info2@de.ebmpapst.com · www.ebmpapst.com

DC axial fan

Product drawing

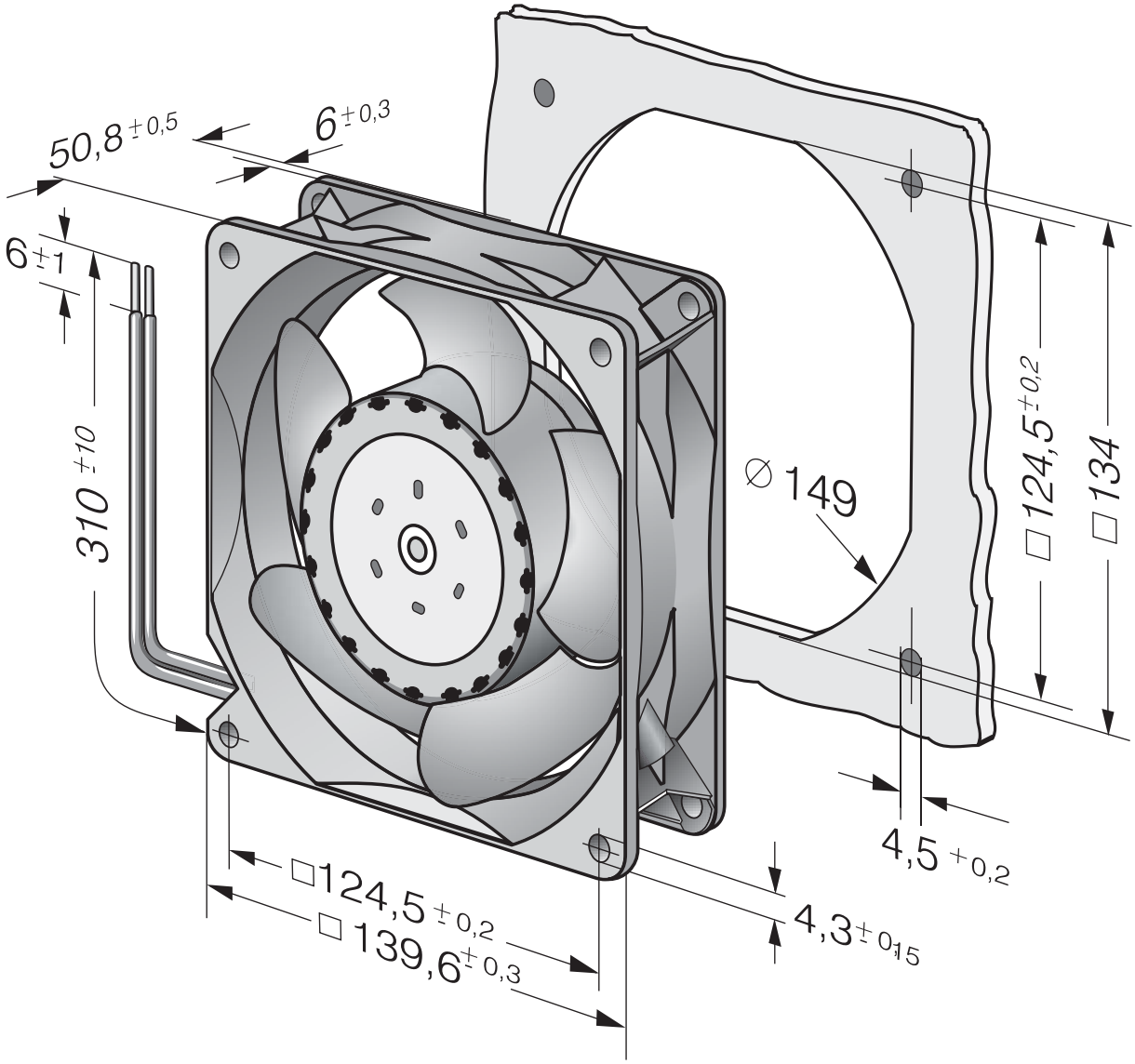

ebm-papst St. Georgen GmbH & Co. KG · Hermann-Papst-Str. 1 · D-78112 St. Georgen · Phone +49 (0) 7724 81-0 · Fax +49 (0) 7724 81-1309 · info2@de.ebmpapst.com · www.ebmpapst.com

DC axial fan

Charts

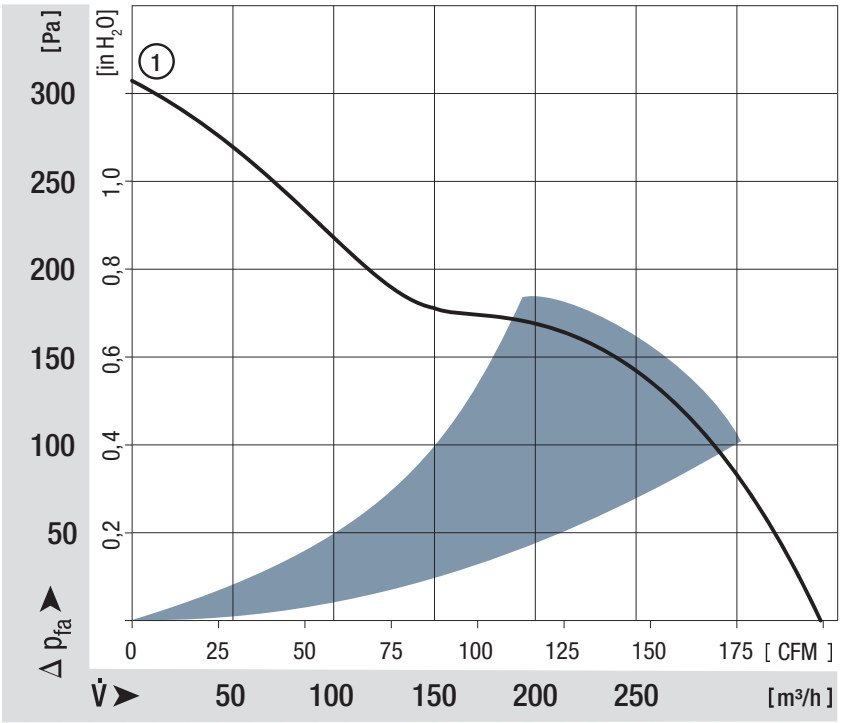

ebm-papst St. Georgen GmbH & Co. KG · Hermann-Papst-Str. 1 · D-78112 St. Georgen · Phone +49 (0) 7724 81-0 · Fax +49 (0) 7724 81-1309 · info2@de.ebmpapst.com · www.ebmpapst.com