DC axial compact fan



ebm-papst St. Georgen GmbH & Co. KG
Hermann-Papst-Str. 1
D-78112 St. Georgen
Phone +49 (0) 7724 81-0
Fax +49 (0) 7724 81-1309
info2@de.ebmpapst.com
www.ebmpapst.com

Nominal data

Type	6318 /2 TDH4P	
Nominal voltage	VDC	48
Nominal voltage range	VDC	36 .. 72
Speed	min^{-1}	9200
Power consumption	W	150
Min. ambient temperature	°C	-20
Max. ambient temperature	°C	75
Air flow	m^3/h	930
Sound power level	B	8.4
Sound pressure level	dB(A)	75

ml = Max. load · me = Max. efficiency · fa = Free air · cs = Customer specification · ce = Customer equipment
Subject to change

DC axial compact fan

Technical description

General description	3-phase fan drive with very smooth operation and high efficiency Housing with grounding lug for M4 x 8 screw (Torx) Power consumption when wide open; these values may be considerably higher at the operating point.
Weight	0.910 kg
Dimensions	Ø 172 x 51 mm
Impeller material	Glass-fiber reinforced PA plastic
Housing material	Die-cast aluminum
Airflow direction	Exhaust over struts
Direction of rotation	Counterclockwise, viewed toward rotor
Storage	Ball bearing
Service life L10 at 40 °C	52500 h
Service life L10 at maximum temperature	20000 h
Cable	With leads AWG 18, 20 or AWG 22, TR 64, speed signal and control input AWG 22
Motor protection	Protection against reverse polarity and blocked rotor.

ebm-papst St. Georgen GmbH & Co. KG · Hermann-Papst-Str. 1 · D-78112 St. Georgen · Phone +49 (0) 7724 81-0 · Fax +49 (0) 7724 81-1309 · info2@de.ebmpapst.com · www.ebmpapst.com

DC axial compact fan

Product drawing

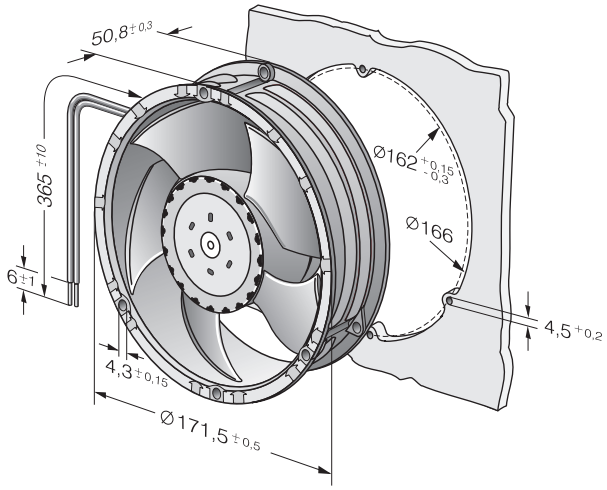

ebm-papst St. Georgen GmbH & Co. KG · Hermann-Papst-Str. 1 · D-78112 St. Georgen · Phone +49 (0) 7724 81-0 · Fax +49 (0) 7724 81-1309 · info2@de.ebmpapst.com · www.ebmpapst.com

DC axial compact fan

Curves

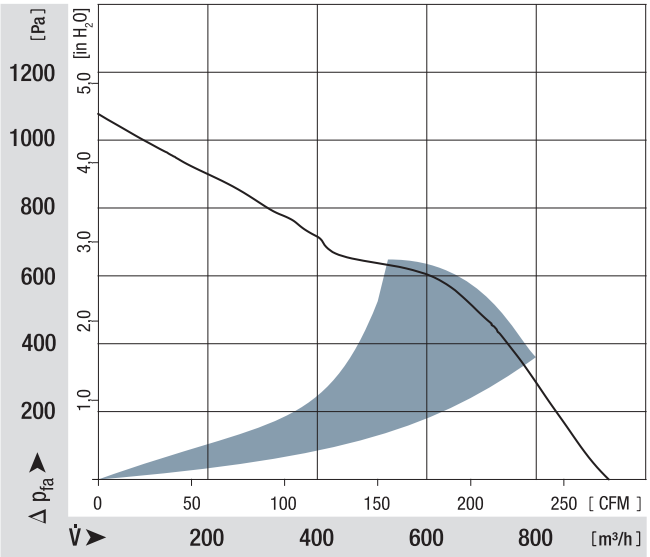

ebm-papst St. Georgen GmbH & Co. KG · Hermann-Papst-Str. 1 · D-78112 St. Georgen · Phone +49 (0) 7724 81-0 · Fax +49 (0) 7724 81-1309 · info2@de.ebmpapst.com · www.ebmpapst.com