DC axial compact fan



ebm-papst St. Georgen GmbH & Co. KG
Hermann-Papst-Str. 1
D-78112 St. Georgen
Phone +49 (0) 7724 81-0
Fax +49 (0) 7724 81-1309
info2@de.ebmpapst.com
www.ebmpapst.com

Nominal data

Type	6448 TDHH	
Nominal voltage	VDC	48
Nominal voltage range	VDC	36 .. 72
Speed	min^{-1}	7500
Power input	W	163
Min. ambient temperature	°C	-20
Max. ambient temperature	°C	60
Air flow	m^3/h	900
Sound power level	B	8.6
Sound pressure level	dB(A)	78

ml = Max. load · me = Max. efficiency · fa = Running at free air · cs = Customer specs · cu = Customer unit
Subject to alterations

DC axial compact fan

Technical features

General description	Free air power consumption, these values may be considerably higher at the operating point.
Mass	0.760 kg
Dimensions	172 x 150 x 51 mm
Material of impeller	Fiberglass-reinforced PA plastic
Housing material	Aluminum. Housing with grounding lug for screw M4 x 8 (TORX). 48 V version incl. screws.
Direction of air flow	Air exhaust over bars
Direction of rotation	Left, looking at rotor
Bearing	Ball bearings
Lifetime L10 at 40 °C	70000 h
Lifetime L10 at maximum temperature	45000 h
Connection line	Single strands AWG 22, TR 64, bared and tin-plated.
Motor protection	Protected against reverse polarity and locking.
Approval	VDE, CSA, UL
Option	Control inputs and alarm and speed signals.

ebm-papst St. Georgen GmbH & Co. KG · Hermann-Papst-Str. 1 · D-78112 St. Georgen · Phone +49 (0) 7724 81-0 · Fax +49 (0) 7724 81-1309 · info2@de.ebmpapst.com · www.ebmpapst.com

DC axial compact fan

Product drawing

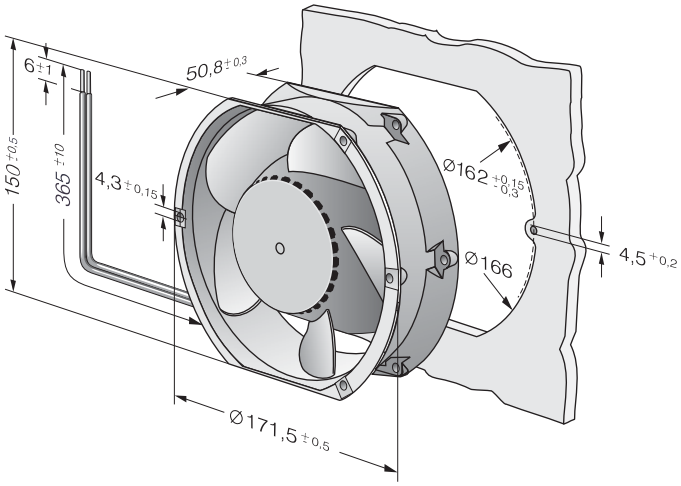

ebm-papst St. Georgen GmbH & Co. KG · Hermann-Papst-Str. 1 · D-78112 St. Georgen · Phone +49 (0) 7724 81-0 · Fax +49 (0) 7724 81-1309 · info2@de.ebmpapst.com · www.ebmpapst.com

DC axial compact fan

Charts: Air flow

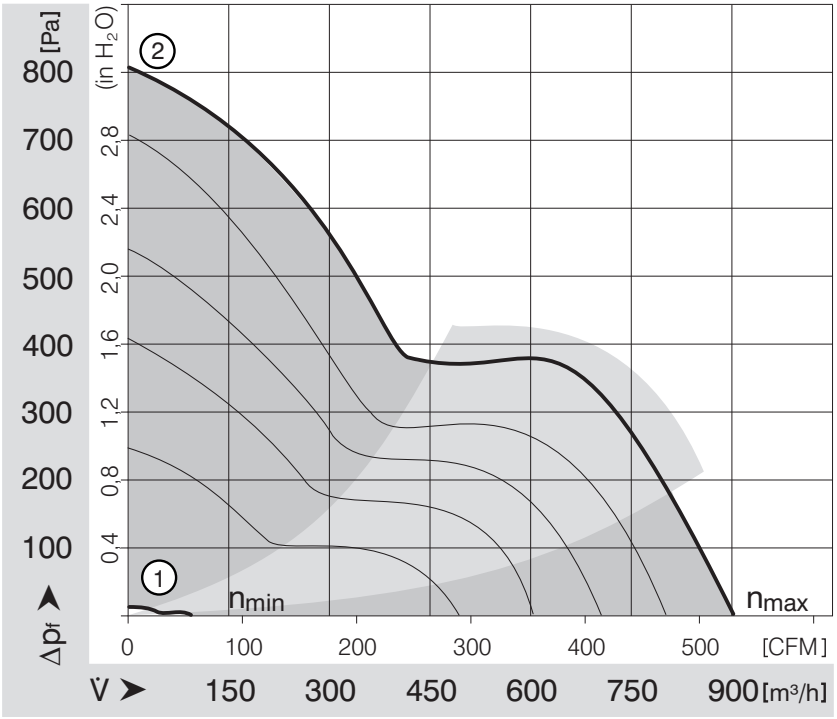

ebm-papst St. Georgen GmbH & Co. KG · Hermann-Papst-Str. 1 · D-78112 St. Georgen · Phone +49 (0) 7724 81-0 · Fax +49 (0) 7724 81-1309 · info2@de.ebmpapst.com · www.ebmpapst.com