DV 4118 N

DC diagonal compact fan

sickled blades (S series)



ebm-papst St. Georgen GmbH & Co. KG
Hermann-Papst-Str. 1
D-78112 St. Georgen
Phone +49 (0) 7724 81-0
Fax +49 (0) 7724 81-1309
info2@de.ebmpapst.com
www.ebmpapst.com

Nominal data

Type	DV 4118 N	
Nominal voltage	VDC	48
Nominal voltage range	VDC	36 .. 60
Speed	min^{-1}	6000
Power input	W	20
Min. ambient temperature	°C	-20
Max. ambient temperature	°C	65
Air flow	m^3/h	280
Sound power level	B	6.9
Sound pressure level	dB(A)	61

ml = Max. load · me = Max. efficiency · fa = Running at free air · cs = Customer specs · cu = Customer unit
Subject to alterations

DC diagonal compact fan

sickled blades (S series)

Technical features

General description	* Free air power consumption, these values may be considerably higher at the operating point.
Mass	0.375 kg
Dimensions	119 x 119 x 38 mm
Material of impeller	Fibreglass-reinforced PA plastic.
Housing material	Aluminium with grounding lug for M4x8 screw (Torx).
Direction of air flow	Air exhaust over bars
Direction of rotation	Left, looking at rotor
Bearing	Ball bearings
Lifetime L10 at 40 °C	70000 h
Lifetime L10 at maximum temperature	40000 h
Connection line	Single strands AWG 22, TR 64, bared and tin-plated.
Motor protection	Protected against reverse polarity and locking.
Locked-rotor protection	With electronic blocking and overload protection
Approval	VDE, CSA, UL, CE
Option	Vario-Pro fan

ebm-papst St. Georgen GmbH & Co. KG · Hermann-Papst-Str. 1 · D-78112 St. Georgen · Phone +49 (0) 7724 81-0 · Fax +49 (0) 7724 81-1309 · info2@de.ebmpapst.com · www.ebmpapst.com

DC diagonal compact fan

sickled blades (S series)

Product drawing

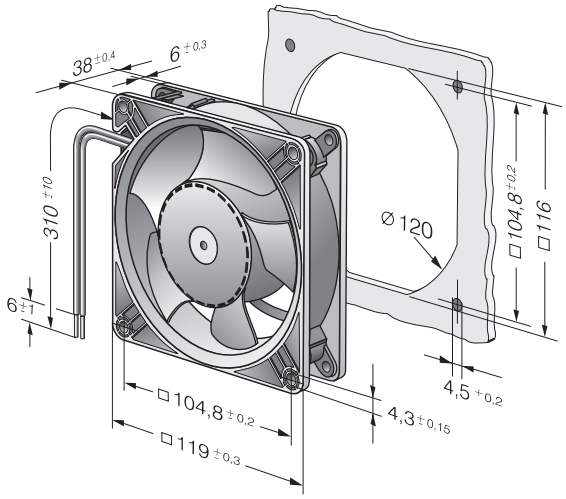

ebm-papst St. Georgen GmbH & Co. KG · Hermann-Papst-Str. 1 · D-78112 St. Georgen · Phone +49 (0) 7724 81-0 · Fax +49 (0) 7724 81-1309 · info2@de.ebmpapst.com · www.ebmpapst.com

DC diagonal compact fan

sickled blades (S series)

Charts: Air flow

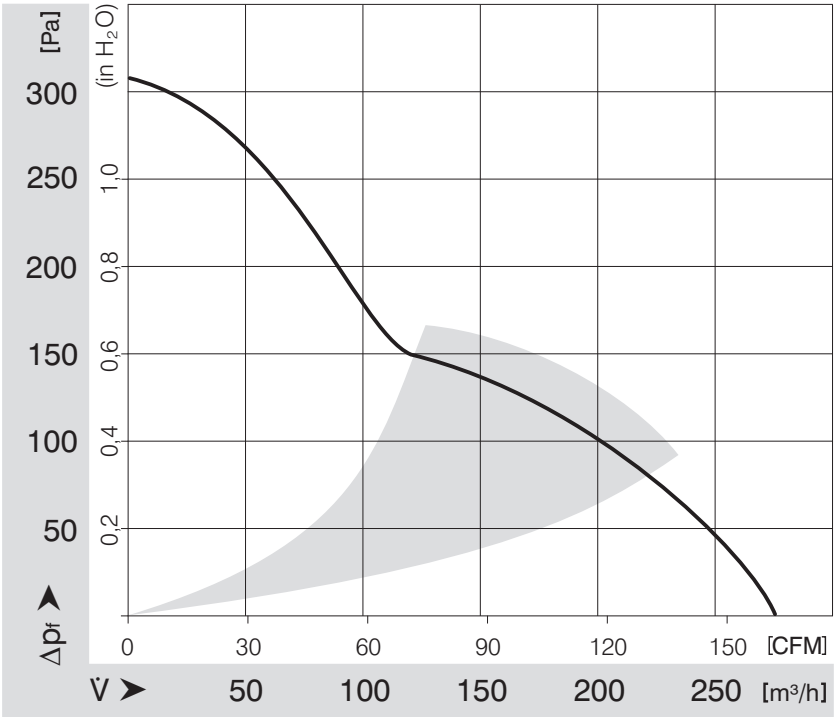

ebm-papst St. Georgen GmbH & Co. KG · Hermann-Papst-Str. 1 · D-78112 St. Georgen · Phone +49 (0) 7724 81-0 · Fax +49 (0) 7724 81-1309 · info2@de.ebmpapst.com · www.ebmpapst.com