DV 6248

DC diagonal compact fan

sickled blades (S series)



ebm-papst St. Georgen GmbH & Co. KG
Hermann-Papst-Str. 1
D-78112 St. Georgen
Phone +49 (0) 7724 81-0
Fax +49 (0) 7724 81-1309
info2@de.ebmpapst.com
www.ebmpapst.com

Nominal data

Type	DV 6248	
Nominal voltage	VDC	48
Nominal voltage range	VDC	28 .. 60
Speed	min^{-1}	4300
Power input	W	40.0
Min. ambient temperature	°C	-20
Max. ambient temperature	°C	75
Air flow	m^3/h	540
Sound power level	B	7.1
Sound pressure level	dB(A)	63

ml = Max. load · me = Max. efficiency · fa = Running at free air · cs = Customer specs · cu = Customer unit
Subject to alterations

DC diagonal compact fan

sickled blades (S series)

Technical features

Mass	0.820 kg
Dimensions	172 Ø x 51 mm
Material of impeller	Fiberglass-reinforced PA plastic
Housing material	Aluminum. Housing with grounding lug for screw M4 x 8 (TORX). 48 V version incl. screws.
Direction of air flow	Air exhaust over bars
Direction of rotation	Left, looking at rotor
Bearing	Ball bearings
Lifetime L10 at 40 °C	90000 h
Lifetime L10 at maximum temperature	40000 h
Connection line	Single strands AWG 22, TR 64, bared and tin-plated.
Motor protection	Protected against reverse polarity and locking.
Locked-rotor protection	Electronic blocking protection, with electronic motor current limit in the startup phase and when the rotor is blocked.
Approval	VDE, CSA, UL, CE

ebm-papst St. Georgen GmbH & Co. KG · Hermann-Papst-Str. 1 · D-78112 St. Georgen · Phone +49 (0) 7724 81-0 · Fax +49 (0) 7724 81-1309 · info2@de.ebmpapst.com · www.ebmpapst.com

DC diagonal compact fan

sickled blades (S series)

Product drawing

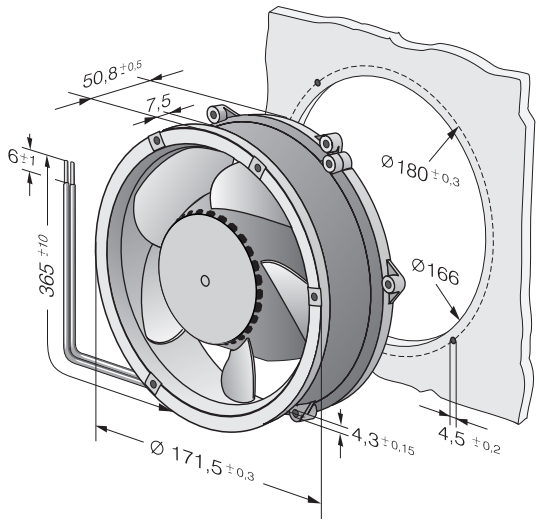

ebm-papst St. Georgen GmbH & Co. KG · Hermann-Papst-Str. 1 · D-78112 St. Georgen · Phone +49 (0) 7724 81-0 · Fax +49 (0) 7724 81-1309 · info2@de.ebmpapst.com · www.ebmpapst.com

DC diagonal compact fan

sickled blades (S series)

Charts: Air flow

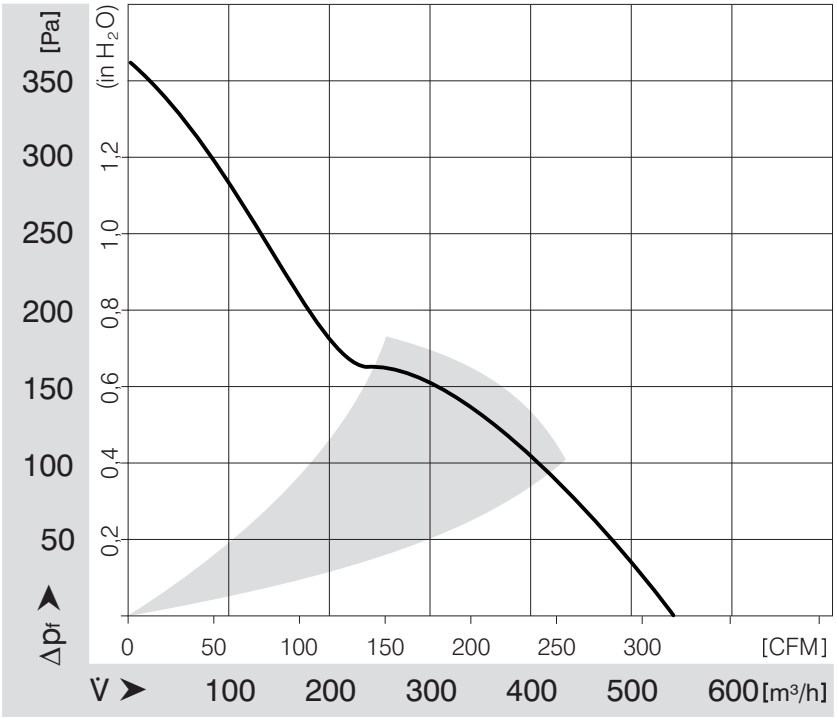

ebm-papst St. Georgen GmbH & Co. KG · Hermann-Papst-Str. 1 · D-78112 St. Georgen · Phone +49 (0) 7724 81-0 · Fax +49 (0) 7724 81-1309 · info2@de.ebmpapst.com · www.ebmpapst.com