DC diagonal compact fan

sickled blades (S series)



ebm-papst St. Georgen GmbH & Co. KG
Hermann-Papst-Straße 1
D-78112 St. Georgen
Phone: +49(0)7724/81-0
Fax: +49(0)7724/81-1309
info2@de.ebmpapst.com
www.ebmpapst.com

Nominal data

Type	DV 6224	
Nominal voltage	[VDC]	24
Nominal voltage range	[VDC]	16 .. 28
Speed	[min^{-1}]	4300
Power input	[W]	40.0
Min. ambient temperature	[°C]	-20
Max. ambient temperature	[°C]	75
Air flow	[m^3/h]	540
Sound power level	[B]	7.1
Sound pressure level	[dB(A)]	63

ml = max. load · me = max. efficiency · rfa = running at free air · cs = customer specs · cu = customer unit
Subject to alterations

DC diagonal compact fan

sickled blades (S series)

Technical features

Dimensions	172 Ø x 51 mm
General description	Diagonal fan with low noise when there is a high pressure saddle curve. Very rigid compression curve for high air flow at high counterpressure. Electronic commutation completely integrated.
Connection line	Single strands AWG 22, TR 64, bared and tin-plated.
Locked-rotor protection	Electronic blocking protection, with electronic motor current limit in the startup phase and when the rotor is blocked.
Direction of protection	Left, looking at rotor
Direction of air flow	Air exhaust over bars
Bearing	Ball bearings
Lifetime L10 at 40 °C	90000 h
Lifetime L10 at maximum temperature	40000 h
Mass	0.820 kg
Housing material	Aluminum. Housing with grounding lug for screw M4 x 8 (TORX).
Material of impeller	Fiberglass-reinforced PA plastic
Motor protection	Protected against reverse polarity and locking.
Option	Speed signal, alarm signal
Approval	VDE, CSA, UL, CE

ebm-papst St. Georgen GmbH & Co. KG · Hermann-Papst-Straße 1 · D-78112 St. Georgen · Phone: +49(0)7724/81-0 · Fax: +49(0)7724/81-1309 · info2@de.ebmpapst.com · www.ebmpapst.com

DC diagonal compact fan

sickled blades (S series)

Product drawing

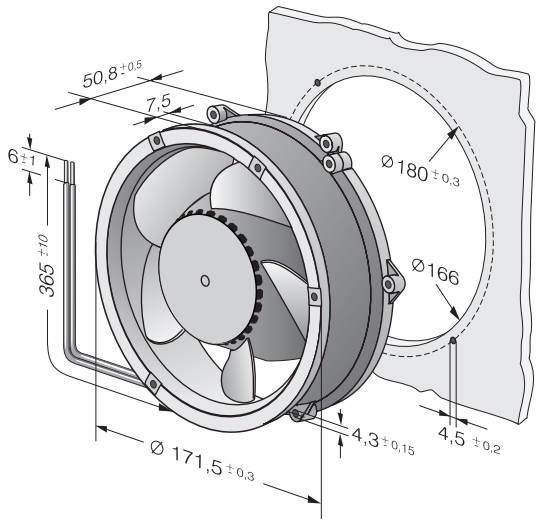

ebm-papst St. Georgen GmbH & Co. KG · Hermann-Papst-Straße 1 · D-78112 St. Georgen · Phone: +49(0)7724/81-0 · Fax: +49(0)7724/81-1309 · info2@de.ebmpapst.com · www.ebmpapst.com

DC diagonal compact fan

sickled blades (S series)

Charts: Air flow

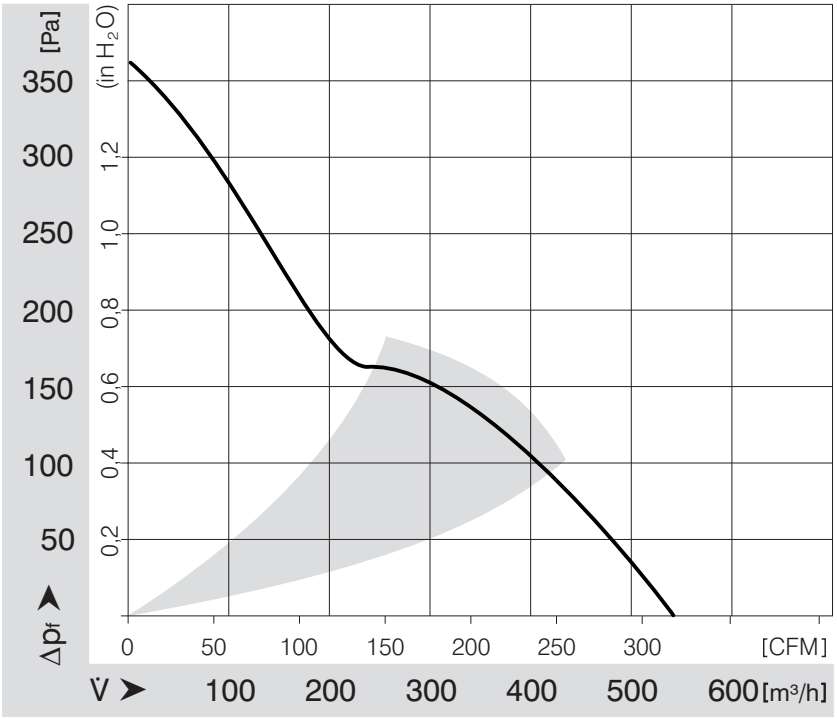

ebm-papst St. Georgen GmbH & Co. KG · Hermann-Papst-Straße 1 · D-78112 St. Georgen · Phone: +49(0)7724/81-0 · Fax: +49(0)7724/81-1309 · info2@de.ebmpapst.com · www.ebmpapst.com