4656 N

AC axial compact fan



ebm-papst St. Georgen GmbH & Co. KG
Hermann-Papst-Straße 1
D-78112 St. Georgen
Phone: +49(0)7724/81-0
Fax: +49(0)7724/81-1309
info2@de.ebmpapst.com
www.ebmpapst.com

Nominal data

Type	4656 N	
Phase		1~
Nominal voltage	VAC	230
Frequency	Hz	50
Speed	min^{-1}	2650
Power input	W	19.0
Min. ambient temperature	°C	-40
Max. ambient temperature	°C	85
Air flow	m^3/h	160
Sound power level	B	5.5
Sound pressure level	dB(A)	47

ml = max. load · me = max. efficiency · rfa = running at free air · cs = customer specs · cu = customer unit
Subject to alterations

AC axial compact fan

Technical features

Dimensions	119 x 119 x 38 mm
General description	AC fan with external rotor shaded-pole motor.
Connection line	2 flat plugs 3.0 x 0.5 mm. Housing with grounding lugs for screw M4 and UNC.
Direction of rotation	Right, looking at rotor
Direction of air flow	Inlet over bars
Bearing	Ball bearings
Lifetime L10 at 40 °C	37500 h
Lifetime L10 at maximum temperature	15000 h
Mass	0.550 kg
Housing material	Metal
Material of impeller	Metal
Motor protection	Protected from overload using impedance protection
Approval	VDE, CSA, UL, CE

ebm-papst St. Georgen GmbH & Co. KG · Hermann-Papst-Straße 1 · D-78112 St. Georgen · Phone: +49(0)7724/81-0 · Fax: +49(0)7724/81-1309 · info2@de.ebmpapst.com · www.ebmpapst.com

AC axial compact fan

Product drawing

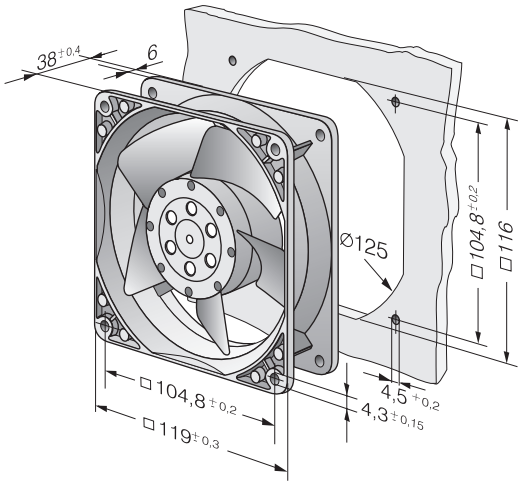

ebm-papst St. Georgen GmbH & Co. KG · Hermann-Papst-Straße 1 · D-78112 St. Georgen · Phone: +49(0)7724/81-0 · Fax: +49(0)7724/81-1309 · info2@de.ebmpapst.com · www.ebmpapst.com

AC axial compact fan

Charts: Air flow

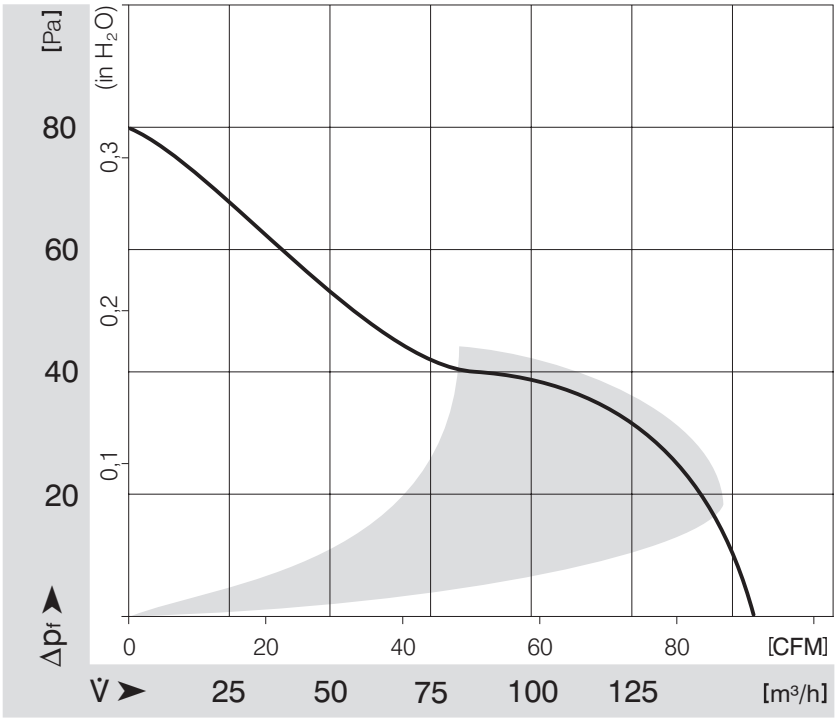

ebm-papst St. Georgen GmbH & Co. KG · Hermann-Papst-Straße 1 · D-78112 St. Georgen · Phone: +49(0)7724/81-0 · Fax: +49(0)7724/81-1309 · info2@de.ebmpapst.com · www.ebmpapst.com