DC axial compact fan



ebm-papst St. Georgen GmbH & Co. KG
Hermann-Papst-Str. 1
D-78112 St. Georgen
Phone +49 (0) 7724 81-0
Fax +49 (0) 7724 81-1309
info2@de.ebmpapst.com
www.ebmpapst.com

Nominal data

Type	512 F	
Nominal voltage	VDC	12
Nominal voltage range	VDC	10.8 .. 13.2
Speed	min^{-1}	5000
Power input	W	0.8
Min. ambient temperature	°C	-20
Max. ambient temperature	°C	70
Air flow	m^3/h	20
Sound power level	B	4.5
Sound pressure level	dB(A)	30

ml = Max. load · me = Max. efficiency · fa = Running at free air · cs = Customer specs · cu = Customer unit
Subject to alterations

DC axial compact fan

Technical features

Mass	0.025 kg
Dimensions	50 x 50 x 15 mm
Material of impeller	Fiberglass-reinforced PA plastic
Housing material	Fiberglass-reinforced PBT plastic
Direction of air flow	Air exhaust over bars
Direction of rotation	Left, looking at rotor
Bearing	Sintec sleeve bearing
Lifetime L10 at 20 °C	50000 h
Lifetime L10 at 60 °C	20000 h
Connection line	Single strands AWG 28, TR 64, bared and tin-plated.
Motor protection	Protected against reverse polarity and locking.
Locked-rotor protection	Impedance protection
Approval	VDE, CSA, UL, CE

ebm-papst St. Georgen GmbH & Co. KG · Hermann-Papst-Str. 1 · D-78112 St. Georgen · Phone +49 (0) 7724 81-0 · Fax +49 (0) 7724 81-1309 · info2@de.ebmpapst.com · www.ebmpapst.com

DC axial compact fan

Product drawing

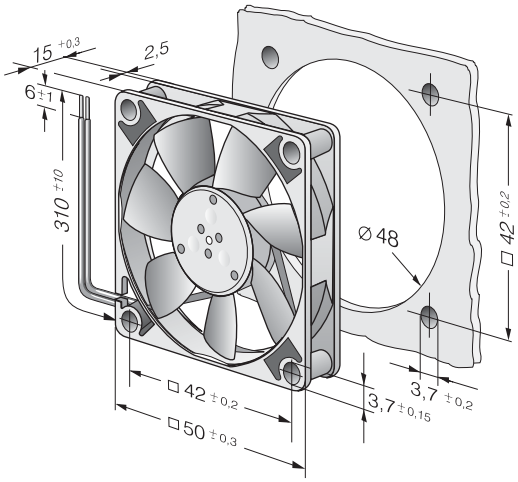

ebm-papst St. Georgen GmbH & Co. KG · Hermann-Papst-Str. 1 · D-78112 St. Georgen · Phone +49 (0) 7724 81-0 · Fax +49 (0) 7724 81-1309 · info2@de.ebmpapst.com · www.ebmpapst.com

DC axial compact fan

Charts: Air flow

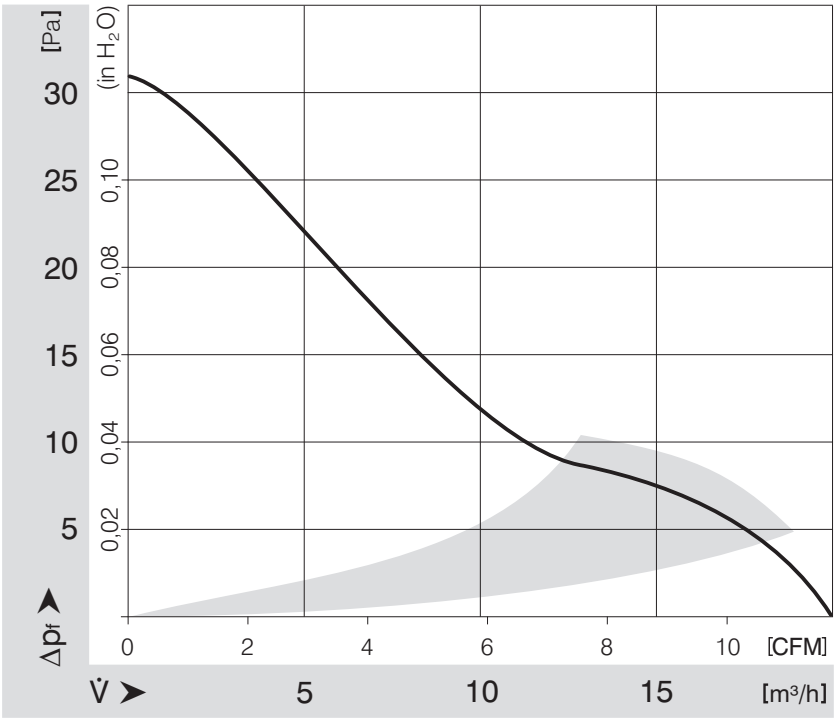

ebm-papst St. Georgen GmbH & Co. KG · Hermann-Papst-Str. 1 · D-78112 St. Georgen · Phone +49 (0) 7724 81-0 · Fax +49 (0) 7724 81-1309 · info2@de.ebmpapst.com · www.ebmpapst.com