DC axial compact fan



ebm-papst St. Georgen GmbH & Co. KG
Hermann-Papst-Straße 1
D-78112 St. Georgen
Phone: +49(0)7724/81-0
Fax: +49(0)7724/81-1309
info2@de.ebmpapst.com
www.ebmpapst.com

Nominal data

Type	8414 N	
Nominal voltage	VDC	24
Nominal voltage range	VDC	18 .. 28
Speed	min^{-1}	3100
Power input	W	2.0
Min. ambient temperature	°C	-20
Max. ambient temperature	°C	70
Air flow	m^3/h	69
Sound power level	B	4.7
Sound pressure level	dB(A)	32

ml = max. load · me = max. efficiency · rfa = running at free air · cs = customer specs · cu = customer unit
Subject to alterations

DC axial compact fan

Technical features

Dimensions	80 x 80 x 25 mm
General description	Electronic commutation completely integrated.
Connection line	Single strands AWG 24, TR 64, bared and tin-plated.
Locked-rotor protection	Blocking and overload protection
Direction of rotation	Left, looking at rotor
Direction of air flow	Air exhaust over bars
Bearing	Ball bearings
Lifetime L10 at 40 °C	70000 h
Lifetime L10 at maximum temperature	35000 h
Mass	0.095 kg
Housing material	Fiberglass-reinforced PBT plastic
Material of impeller	Fiberglass-reinforced PA plastic
Motor protection	Protected against reverse polarity and locking.
Approval	VDE, CSA, UL, CE

ebm-papst St. Georgen GmbH & Co. KG · Hermann-Papst-Straße 1 · D-78112 St. Georgen · Phone: +49(0)7724/81-0 · Fax: +49(0)7724/81-1309 · info2@de.ebmpapst.com · www.ebmpapst.com

DC axial compact fan

Product drawing

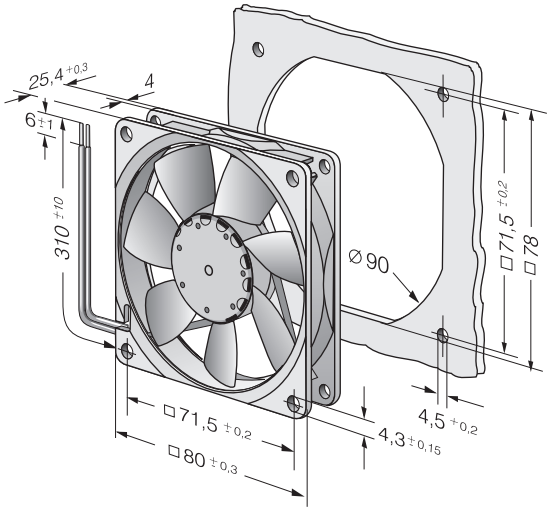

ebm-papst St. Georgen GmbH & Co. KG · Hermann-Papst-Straße 1 · D-78112 St. Georgen · Phone: +49(0)7724/81-0 · Fax: +49(0)7724/81-1309 · info2@de.ebmpapst.com · www.ebmpapst.com

DC axial compact fan

Charts: Air flow

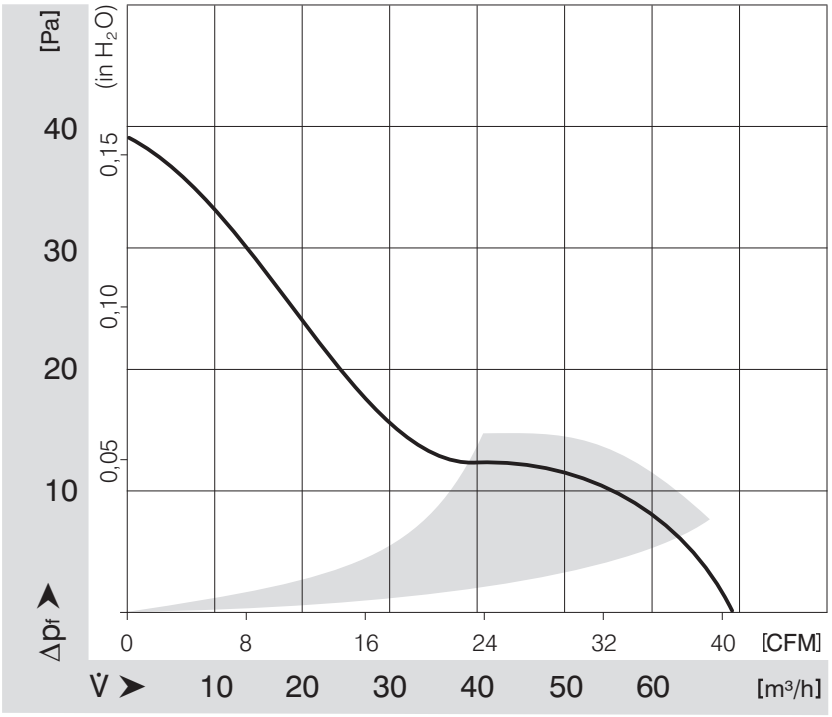

ebm-papst St. Georgen GmbH & Co. KG · Hermann-Papst-Straße 1 · D-78112 St. Georgen · Phone: +49(0)7724/81-0 · Fax: +49(0)7724/81-1309 · info2@de.ebmpapst.com · www.ebmpapst.com