D4E133-DH61-C6

AC centrifugal fan

forward curved, dual inlet

with housing (flange)

ebm-papst Mulfingen GmbH & Co. KG
Bachmühle 2 · D-74673 Mulfingen
Phone +49 7938 81-0
Fax +49 7938 81-110
info1@de.ebmpapst.com
www.ebmpapst.com

Limited partnership · Headquarters Mulfingen
County court Stuttgart · HRA 590344

General partner Elektrobau Mulfingen GmbH · Headquarters Mulfingen
County court Stuttgart · HRB 590142

Nominal data

Type	**D4E133-DH61-C6**
Motor	**M4E068-BF**

Phase		1~
Nominal voltage	VAC	230
Frequency	Hz	50
Type of data definition		fa
Valid for approval / standard		CE
Speed	min^{-1}	930
Power input	W	80
Current draw	A	0.36
Motor capacitor	µF	2
Capacitor voltage	VDB	400
Capacitor standard		P2 (CE)
Min. back pressure	Pa	0
Min. ambient temperature	°C	-25
Max. ambient temperature	°C	55

ml = Max. load · me = Max. efficiency · fa = Running at free air · cs = Customer specs · cu = Customer unit
Subject to alterations

AC centrifugal fan

forward curved, dual inlet

with housing (flange)

Technical features

Mass	2.6 kg
Size	133 mm
Material of impeller	PA plastic
Housing material	Sheet steel, galvanised
Motor suspension	Motor mounted via brackets on one side
Direction of rotation	Clockwise, seen on rotor
Type of protection	IP 44; Depending on installation and position
Insulation class	"B"
Humidity class	F0
Max. permissible ambient motor temp. (transp./ storage)	+ 80 °C
Min. permissible ambient motor temp. (transp./storage)	- 40 °C
Mounting position	Any
Condensate discharge holes	None
Operation mode	S1
Motor bearing	Ball bearing
Speed steps	5
Touch current acc. IEC 60990 (measuring network Fig. 4, TN system)	< 0.75 mA
Motor protection	Thermal overload protector (TOP) wired internally
Cable exit	Axial
Protection class	I (if protective earth is connected by customer)
Product conforming to standard	EN 60335-1; CE

ebm-papst Mulfingen GmbH & Co. KG · Bachmühle 2 · D-74673 Mulfingen · Phone +49 (0) 7938 81-0 · Fax +49 (0) 7938 81-110 · info1@de.ebmpapst.com · www.ebmpapst.com

AC centrifugal fan

forward curved, dual inlet

with housing (flange)

Product drawing

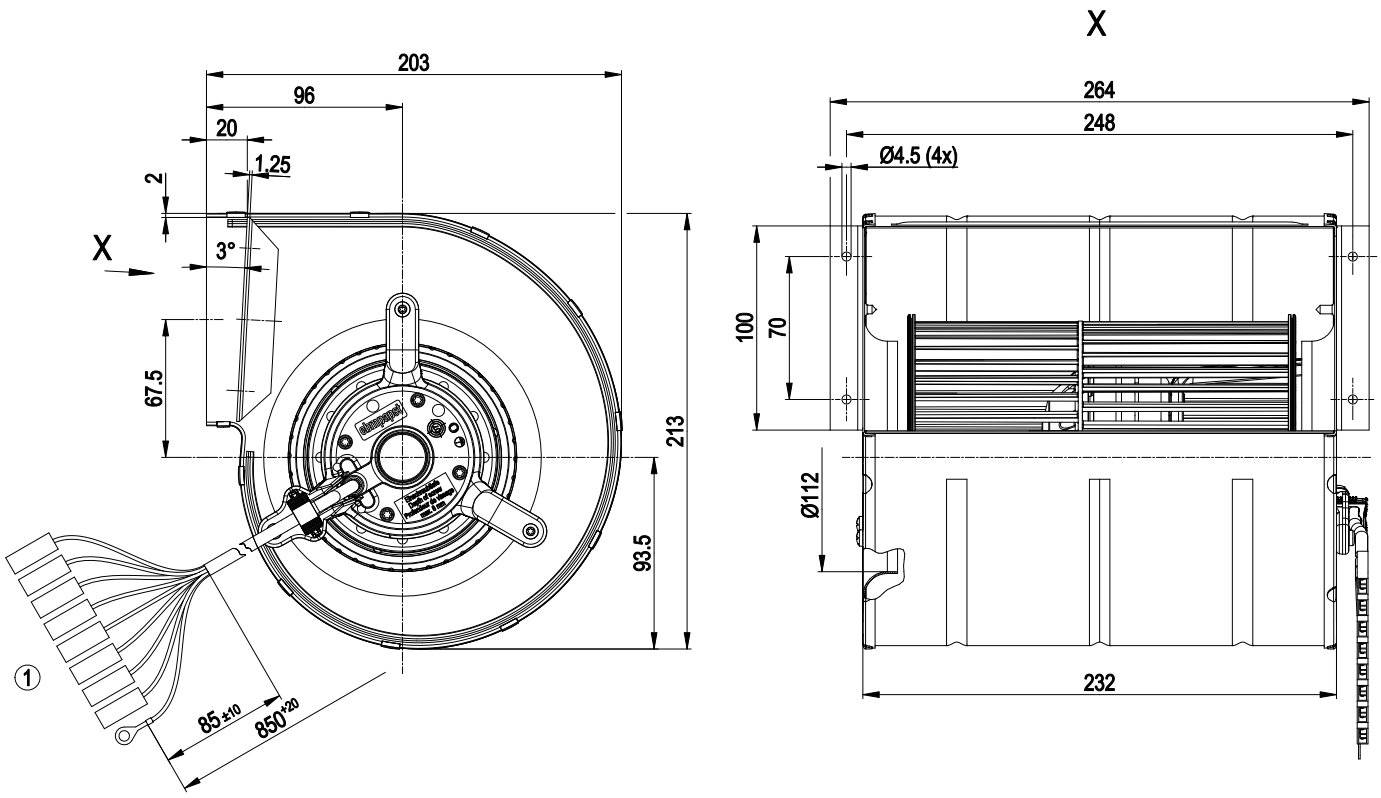

1	Connection line PVC 9G 0.5 mm², 8x threaded pin 6.3x0.8 mm with connector housing AMP 1-735075-0 and 1x contact stud AMP 160102-1 crimped

ebm-papst Mulfingen GmbH & Co. KG · Bachmühle 2 · D-74673 Mulfingen · Phone +49 (0) 7938 81-0 · Fax +49 (0) 7938 81-110 · info1@de.ebmpapst.com · www.ebmpapst.com

AC centrifugal fan

forward curved, dual inlet

with housing (flange)

Connection screen

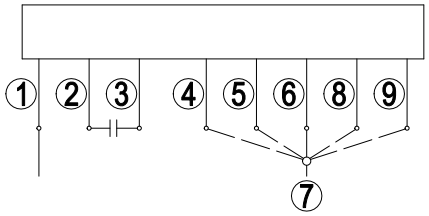

Note: Fast speed (step IV); slow speed (step I)

1	= N = blue
2	brown
3	yellow
4	Step I black 1 / white
5	Step II black 2 / red
6	Step III black 3 / grey
7	L1
8	Step IV black 4 / orange
9	Step V black 5 / black

ebm-papst Mulfingen GmbH & Co. KG · Bachmühle 2 · D-74673 Mulfingen · Phone +49 (0) 7938 81-0 · Fax +49 (0) 7938 81-110 · info1@de.ebmpapst.com · www.ebmpapst.com

AC centrifugal fan

forward curved, dual inlet

with housing (flange)

Charts: Air flow 50 Hz

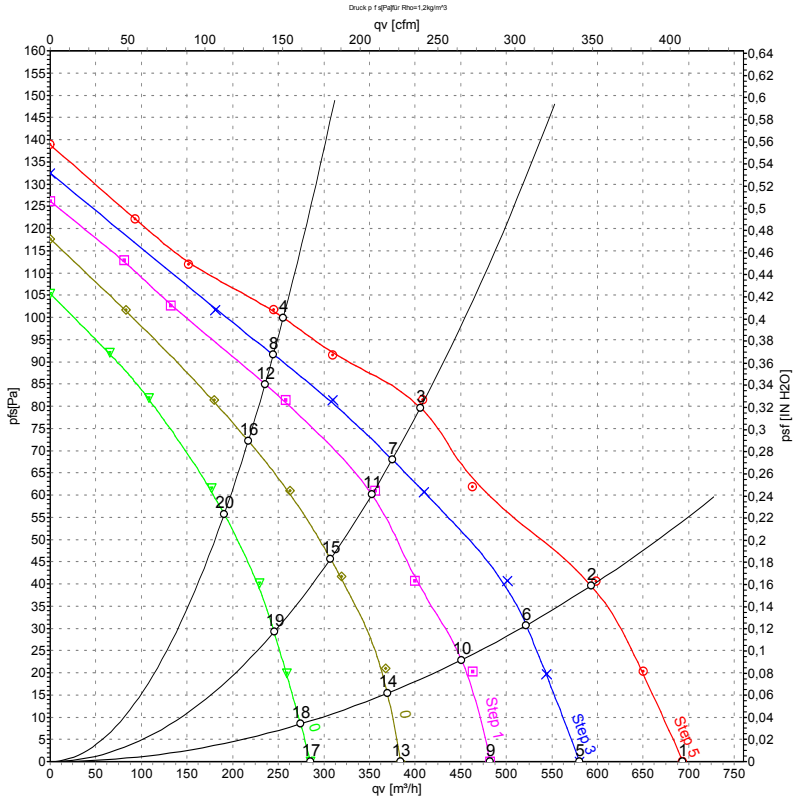

Measurement: LU-24566
Measurement: LU-24567
Measurement: LU-24568
Measurement: LU-24569
Measurement: LU-24570

Air performance measured as per ISO 5801 Installation category A. For detailed information on the measuring set-up, please contact ebm-papst. Suction-side noise levels: LwA measured as per ISO 13347 / LpA measured with 1m distance to fan axis. The values given are valid under the measuring conditions mentioned above and may vary according to the actual installation situation. With any deviation from the standard set-up, the specific values have to be checked and reviewed with the unit installed.

Measured values

	Stage	U	f	n	P_e	I	qv	p_{fs}
		V	Hz	min^{-1}	W	A	m^3/h	Pa
1	5	230	50	930	80	0.36	695	0
2	5	230	50	1135	74	0.32	595	40
3	5	230	50	1270	69	0.30	405	80
4	5	230	50	1340	67	0.30	255	100
5	4	230	50	820	68	0.30	580	0
6	4	230	50	990	63	0.28	520	31
7	4	230	50	1195	57	0.25	375	68
8	4	230	50	1295	55	0.24	245	92
9	3	230	50	690	61	0.27	480	0
10	3	230	50	900	57	0.26	450	24
11	3	230	50	1115	52	0.23	350	62
12	3	230	50	1240	48	0.21	235	85
13	2	230	50	565	53	0.24	385	0
14	2	230	50	750	51	0.23	370	19
15	2	230	50	985	46	0.21	305	46
16	2	230	50	1150	42	0.20	215	72
17	1	230	50	420	46	0.21	285	0
18	1	230	50	545	45	0.21	275	8
19	1	230	50	795	42	0.20	245	29
20	1	230	50	1010	38	0.18	190	56

U = Supply voltage · f = Frequency · n = Speed · P_e = Power input · I = Current draw · qv = Air flow · p_{fs} = Pressure increase

ebm-papst Mulfingen GmbH & Co. KG · Bachmühle 2 · D-74673 Mulfingen · Phone +49 (0) 7938 81-0 · Fax +49 (0) 7938 81-110 · info1@de.ebmpapst.com · www.ebmpapst.com