D4E250-CA01-01

AC centrifugal fan

forward curved, dual inlet

with housing (large flange)



ebm-papst Mulfingen GmbH & Co. KG
Bachmühle 2 · D-74673 Mulfingen
Phone +49 7938 81-0
Fax +49 7938 81-110
info1@de.ebmpapst.com
www.ebmpapst.com

Limited partnership · Headquarters Mulfingen
County court Stuttgart · HRA 590344

General partner Elektrobau Mulfingen GmbH · Headquarters Mulfingen
County court Stuttgart · HRB 590142

ErP2015 EXCEEDS THE NORM

Nominal data

Type	**D4E250-CA01-01**
Motor	**M4E094-LA**

Phase		1~	1~
Nominal voltage	VAC	230	230
Frequency	Hz	50	60
Type of data definition		ml	ml
Valid for approval / standard		CE	CE
Speed	min^{-1}	1200	1400
Power input	W	1250	1285
Current draw	A	6	5.9
Motor capacitor	µF	14	14
Capacitor voltage	VDB	500	500
Min. back pressure	Pa	100	350
Min. ambient temperature	°C	-40	-40
Max. ambient temperature	°C	40	40

ml = Max. load · me = Max. efficiency · fa = Running at free air · cs = Customer specs · cu = Customer unit
Subject to alterations

Data according to ErP directive

Installation category	B
Efficiency category	Total
Variable speed drive	No
Specific ratio*	1.00

* Specific ratio = 1 + p_f / 100 000 Pa

		Actual	Request 2013	Request 2015
Overall efficiency η_e		43.5	34.6	41.6
Efficiency grade N		50.9	42	49
Power input P_e	kW	0.68		
Air flow q_v	m^3/h	2440		
Pressure increase p_f	Pa	444		
Speed n	min^{-1}	1395		

Data definition with optimum efficiency.

AC centrifugal fan

forward curved, dual inlet

with housing (large flange)

Technical features

Mass	16.3 kg
Size	250 mm
Surface of rotor	Cast in aluminium
Material of impeller	Sendzimir galvanized sheet steel
Housing material	Sendzimir galvanized sheet steel
Direction of rotation	Clockwise, seen on rotor
Type of protection	IP 20
Insulation class	"F"
Humidity class	F0
Max. permissible ambient motor temp. (transp./ storage)	+ 80 °C
Min. permissible ambient motor temp. (transp./storage)	- 40 °C
Mounting position	Any
Condensate discharge holes	None
Operation mode	S1
Motor bearing	Ball bearing
Touch current acc. IEC 60990 (measuring network Fig. 4, TN system)	<= 3.5 mA
Motor protection	Thermal overload protector (TOP) brought out
Cable exit	Axial
Protection class	I (if protective earth is connected by customer)
Product conforming to standard	CE
Approval	GOST; CCC

ebm-papst Mulfingen GmbH & Co. KG · Bachmühle 2 · D-74673 Mulfingen · Phone +49 (0) 7938 81-0 · Fax +49 (0) 7938 81-110 · info1@de.ebmpapst.com · www.ebmpapst.com

AC centrifugal fan

forward curved, dual inlet

with housing (large flange)

Product drawing

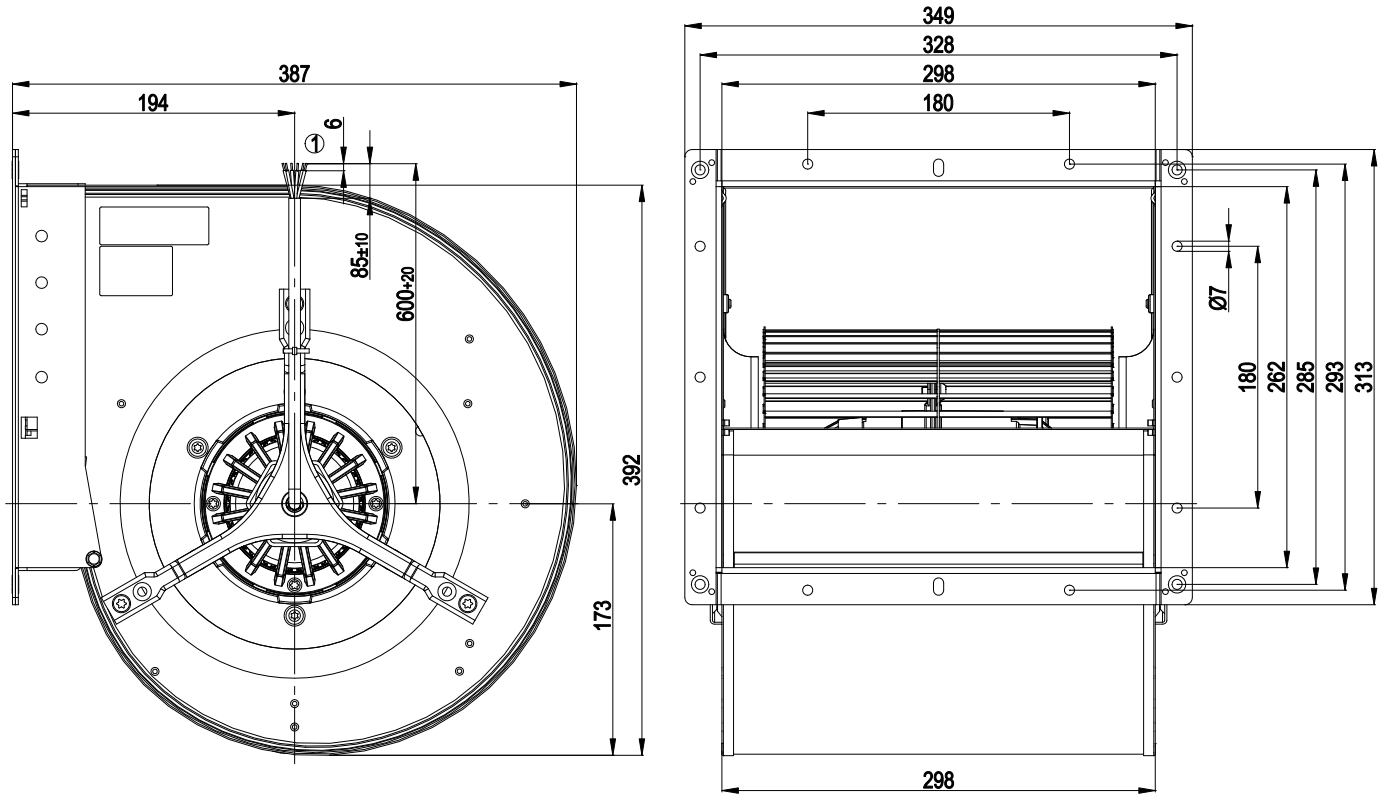

1	Connection line ETFE AWG18, 6 x brass lead tips crimped

Connection screen

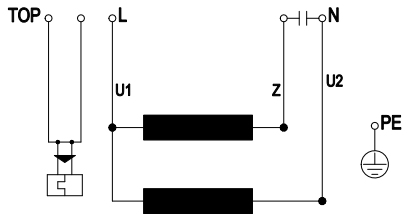

TOP	2 x grey	U1	blue	Z	brown
U2	black	PE	green / yellow		

ebm-papst Mulfingen GmbH & Co. KG · Bachmühle 2 · D-74673 Mulfingen · Phone +49 (0) 7938 81-0 · Fax +49 (0) 7938 81-110 · info1@de.ebmpapst.com · www.ebmpapst.com

AC centrifugal fan

forward curved, dual inlet

with housing (large flange)

Charts: Air flow 50 Hz

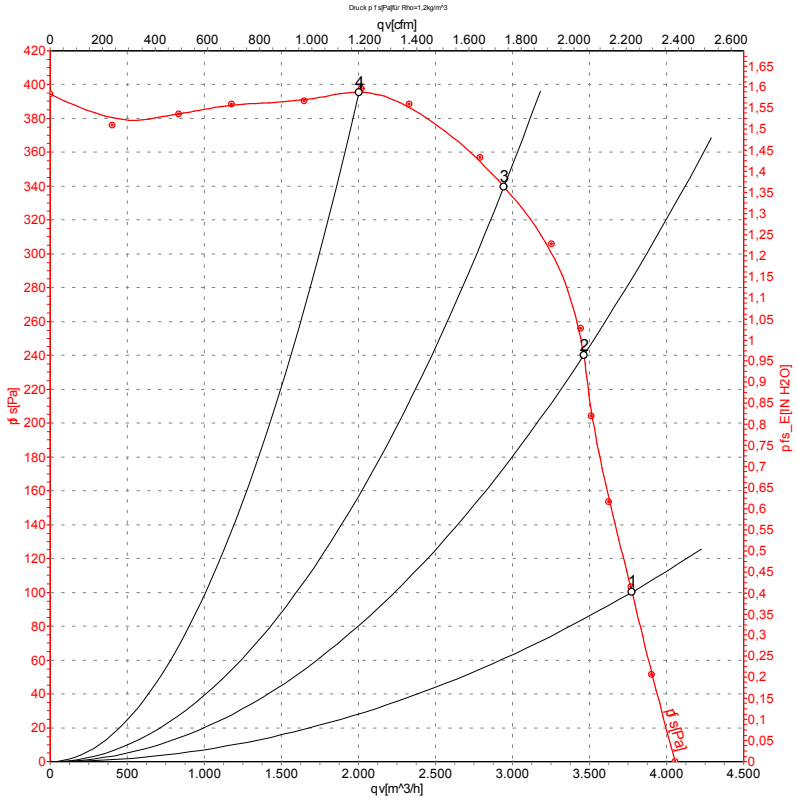

Measurement: LU-41792

Air performance measured as per ISO 5801 Installation category A. For detailed information on the measuring set-up, please contact ebm-papst. Suction-side noise levels: LwA measured as per ISO 13347 / LpA measured with 1m distance to fan axis. The values given are valid under the measuring conditions mentioned above and may vary according to the actual installation situation. With any deviation from the standard set-up, the specific values have to be checked and reviewed with the unit installed.

Measured values

	U	f	n	P_e	I	qv	p_{fs}
	V	Hz	min^{-1}	W	A	m^3/h	Pa
1	230	50	1200	1250	6.00	3770	100
2	230	50	1280	1073	5.18	3460	240
3	230	50	1350	843	4.18	2945	340
4	230	50	1420	598	3.26	2005	400

U = Supply voltage · f = Frequency · n = Speed · P_e = Power input · I = Current draw · qv = Air flow · p_{fs} = Pressure increase

ebm-papst Mulfingen GmbH & Co. KG · Bachmühle 2 · D-74673 Mulfingen · Phone +49 (0) 7938 81-0 · Fax +49 (0) 7938 81-110 · info1@de.ebmpapst.com · www.ebmpapst.com

AC centrifugal fan

forward curved, dual inlet

with housing (large flange)

Charts: Air flow 60 Hz

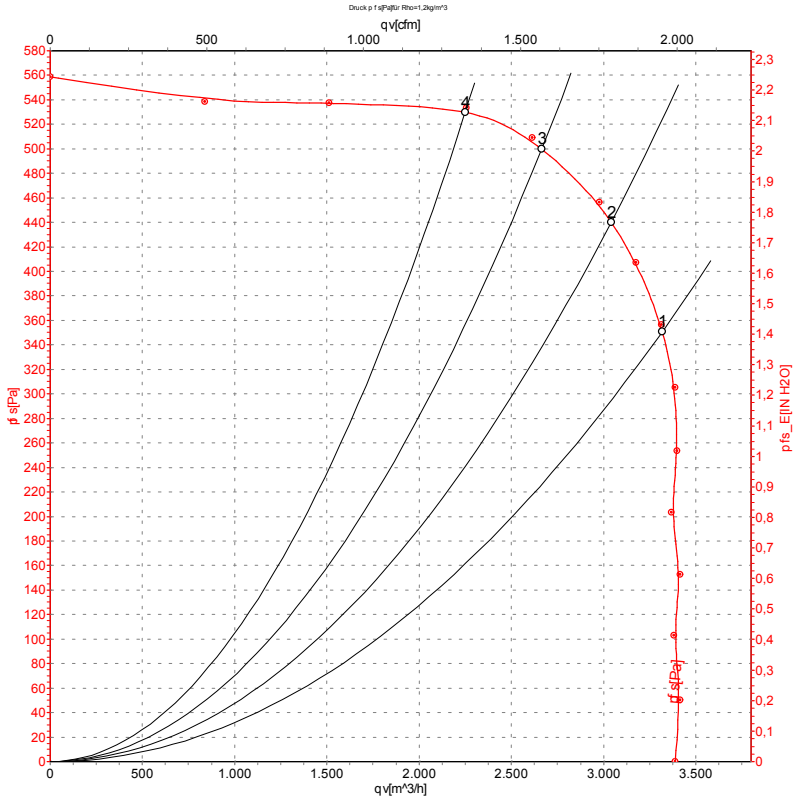

Measurement: LU-41793

Air performance measured as per ISO 5801 Installation category A. For detailed information on the measuring set-up, please contact ebm-papst. Suction-side noise levels: LwA measured as per ISO 13347 / LpA measured with 1m distance to fan axis. The values given are valid under the measuring conditions mentioned above and may vary according to the actual installation situation. With any deviation from the standard set-up, the specific values have to be checked and reviewed with the unit installed.

Measured values

	U	f	n	P_e	I	qv	p_{fs}
	V	Hz	min^{-1}	W	A	m^3/h	Pa
1	230	60	1400	1285	5.90	3310	350
2	230	60	1515	1137	5.07	3040	440
3	230	60	1590	1002	4.40	2665	500
4	230	60	1650	870	3.78	2250	530

U = Supply voltage · f = Frequency · n = Speed · P_e = Power input · I = Current draw · qv = Air flow · p_{fs} = Pressure increase

ebm-papst Mulfingen GmbH & Co. KG · Bachmühle 2 · D-74673 Mulfingen · Phone +49 (0) 7938 81-0 · Fax +49 (0) 7938 81-110 · info1@de.ebmpapst.com · www.ebmpapst.com