K2E250-RA50-01

AC centrifugal module - RadiCal

backward curved

with housing



ebm-papst Mulfingen GmbH & Co. KG
Bachmühle 2 · D-74673 Mulfingen
Phone +49 7938 81-0
Fax +49 7938 81-110
info1@de.ebmpapst.com
www.ebmpapst.com

Nominal data

Type	**K2E250-RA50-01**
Motor	**M2E068-EC**

Phase		1~	1~
Nominal voltage	VAC	230	230
Frequency	Hz	50	60
Type of data definition		ml	ml
Valid for approval / standard		CE	CE
Speed	min^{-1}	2500	2450
Power input	W	210	285
Current draw	A	0.93	1.25
Motor capacitor	µF	5	5
Capacitor voltage	VDB	400	400
Min. back pressure	Pa	0	0
Max. ambient temperature	°C	70	50

ml = max. load · me = max. efficiency · rfa = running at free air · cs = customer specs · cu = customer unit
Subject to alterations

AC centrifugal module - RadiCal

backward curved

with housing

Technical features

Size	250 mm
Surface of rotor	Coated in black
Material of impeller	Plastic PA6, fibreglass-reinforced
Housing material	Plastic PA6, fibreglass-reinforced
Number of blades	7
Direction of rotation	Clockwise, seen on rotor
Type of protection	IP 44; Depending on installation and position
Insulation class	"F"
Humidity class	F1-2
Max. permissible ambient motor temp. (transp./ storage)	+ 80 °C
Min. permissible ambient motor temp. (transp./storage)	- 40 °C
Mounting position	Any
Condensate discharge holes	None
Operation mode	S1
Motor bearing	Ball bearing
Leakage current	< 0.75 mA
Electrical leads	With plug
Motor protection	Thermal overload protector (TOP) wired internally
Cable exit	Variable
Protection class	I
Product conforming to standard	EN 60335-1; CE

ebm-papst Mulfingen GmbH & Co. KG · Bachmühle 2 · D-74673 Mulfingen · Phone +49 7938 81-0 · Fax +49 7938 81-110 · info1@de.ebmpapst.com · www.ebmpapst.com

AC centrifugal module - RadiCal

backward curved

with housing

Product drawing

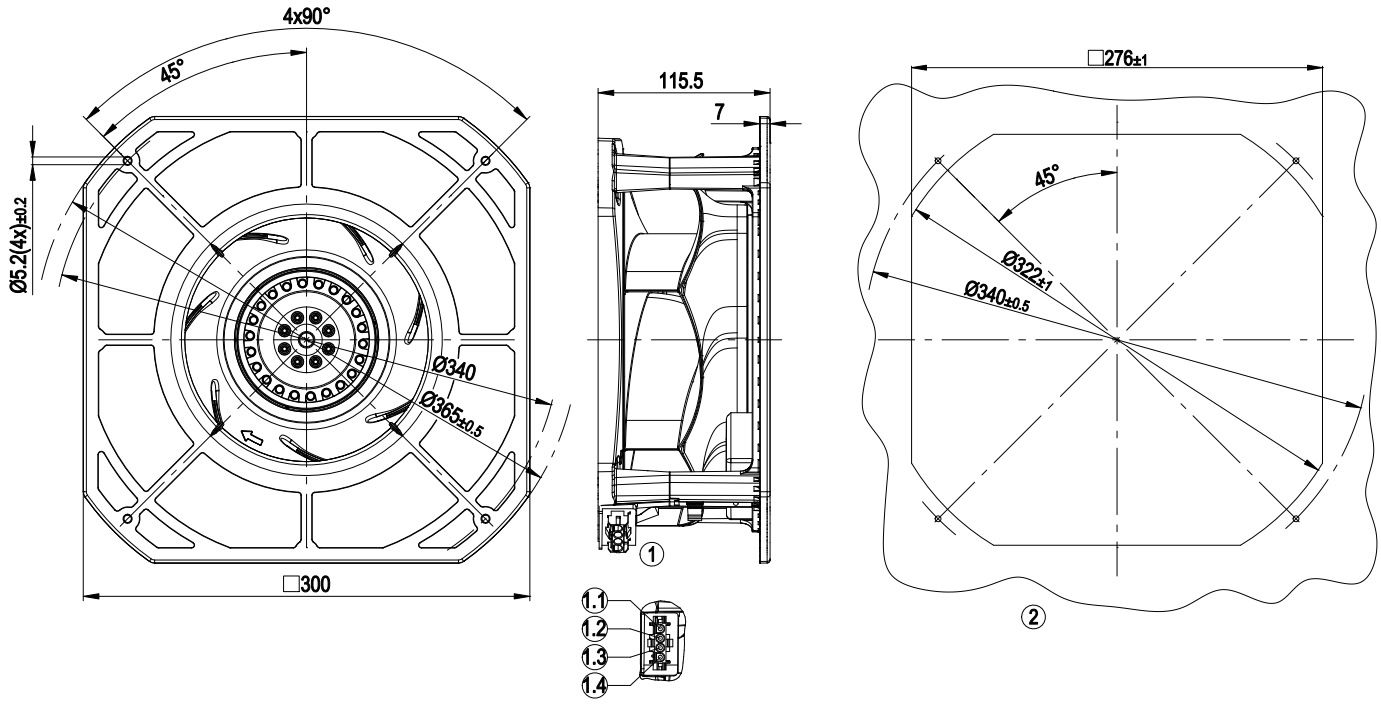

1	Coded plug system AMP Universal-Mate-N-Lok
	Connector housing: AMP 350 780-1
	2 x plug pin: AMP 926 885-1, 2 x plug pin: AMP 926 883-1
	Mating connector (not included in standard scope of delivery):
	Connector housing: AMP 350 779-1
	4 x female connector: AMP 926 884-1
1.1	PE
1.2	N
1.3	L + capacitor
1.4	Capacitor
	(Capacitor switched internally)
2	Mounting dimensions

ebm-papst Mulfingen GmbH & Co. KG · Bachmühle 2 · D-74673 Mulfingen · Phone +49 7938 81-0 · Fax +49 7938 81-110 · info1@de.ebmpapst.com · www.ebmpapst.com

AC centrifugal module - RadiCal

backward curved

with housing

Connection screen

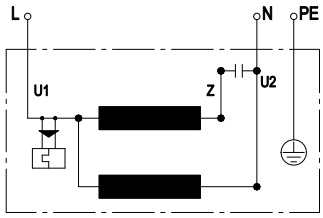

U1	blue	Z	brown	U2	black
PE	green/yellow				

ebm-papst Mulfingen GmbH & Co. KG · Bachmühle 2 · D-74673 Mulfingen · Phone +49 7938 81-0 · Fax +49 7938 81-110 · info1@de.ebmpapst.com · www.ebmpapst.com

AC centrifugal module - RadiCal

backward curved

with housing

Charts: Air flow 50 Hz

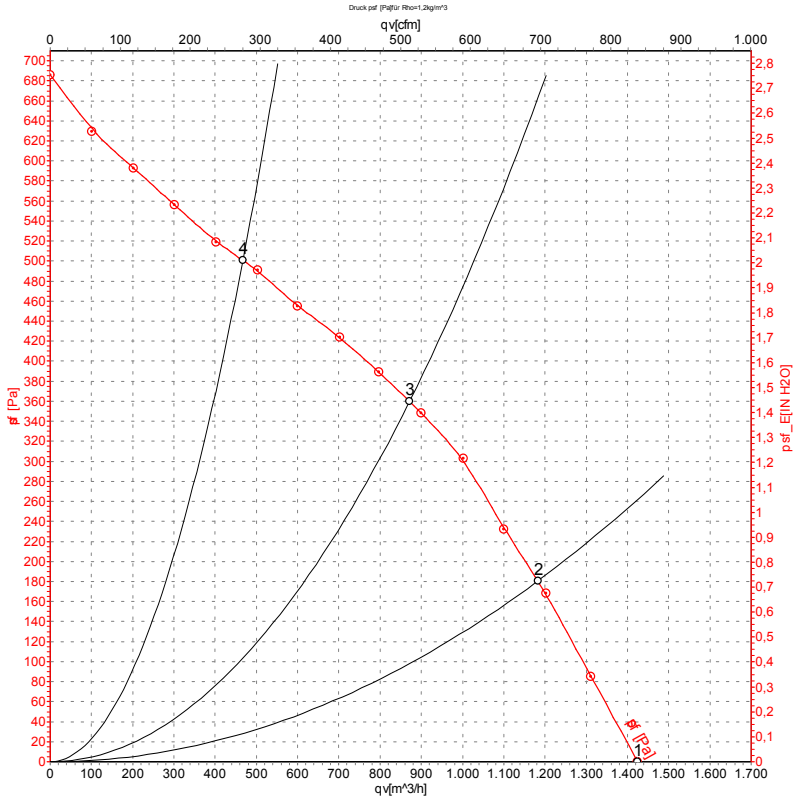

Measurement: LU-135153

Air performance measured as per ISO 5801 Installation category A. For detailed information on the measuring set-up, please contact ebm-papst. Suction-side noise levels: LwA measured as per ISO 13347 / LpA measured with 1m distance to fan axis. The values given are valid under the measuring conditions mentioned above and may vary according to the actual installation situation. With any deviation from the standard set-up, the specific values have to be checked and reviewed with the unit installed.

Measured values

	U	f	n	P_e	I	LpA_{in}	LwA_{in}	qv	p_{sf}
	V	Hz	min^{-1}	W	A	dB(A)	dB(A)	m^3/h	Pa
1	230	50	2630	179	0.78	67	75	1425	0
2	230	50	2535	206	0.90	62	70	1180	180
3	230	50	2500	210	0.93	58	67	870	360
4	230	50	2585	189	0.83	64	72	465	500

ebm-papst Mulfingen GmbH & Co. KG · Bachmühle 2 · D-74673 Mulfingen · Phone +49 7938 81-0 · Fax +49 7938 81-110 · info1@de.ebmpapst.com · www.ebmpapst.com

AC centrifugal module - RadiCal

backward curved

with housing

Charts: Air flow 60 Hz

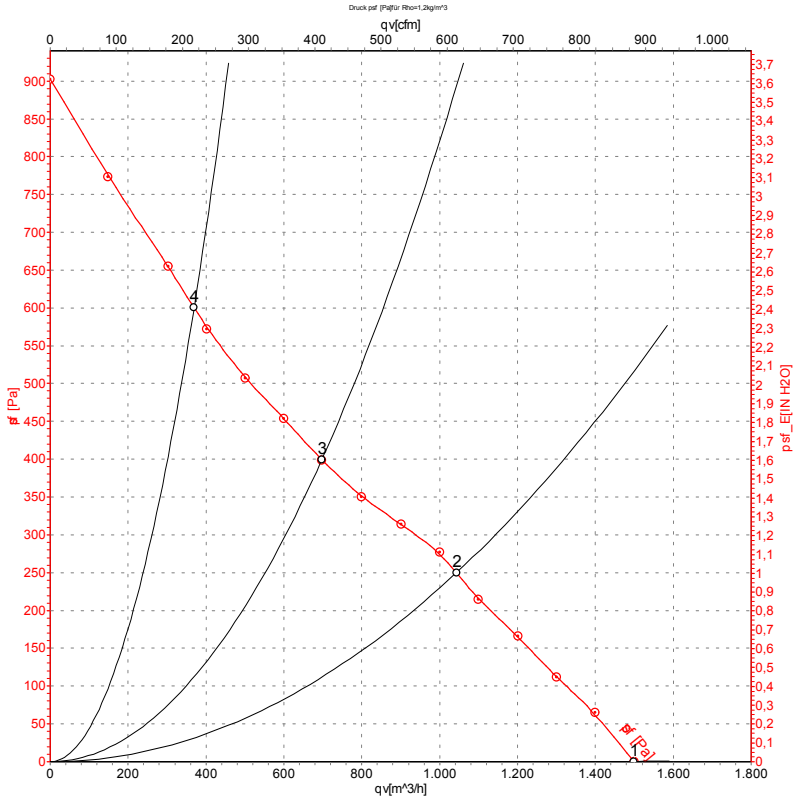

Measurement: LU-135157

Air performance measured as per ISO 5801 Installation category A. For detailed information on the measuring set-up, please contact ebm-papst. Suction-side noise levels: LwA measured as per ISO 13347 / LpA measured with 1m distance to fan axis. The values given are valid under the measuring conditions mentioned above and may vary according to the actual installation situation. With any deviation from the standard set-up, the specific values have to be checked and reviewed with the unit installed.

Measured values

	U	f	n	P_e	I	LpA_{in}	LwA_{in}	qv	p_{sf}
	V	Hz	min^{-1}	W	A	dB(A)	dB(A)	m^3/h	Pa
1	230	60	2775	246	1.07	68	77	1500	0
2	230	60	2450	285	1.25	61	69	1045	250
3	230	60	2460	272	1.19	60	69	700	400
4	230	60	2785	246	1.06	68	76	370	600

ebm-papst Mulfingen GmbH & Co. KG · Bachmühle 2 · D-74673 Mulfingen · Phone +49 7938 81-0 · Fax +49 7938 81-110 · info1@de.ebmpapst.com · www.ebmpapst.com