AC motor

ebm-papst Mulfingen GmbH & Co. KG
Bachmühle 2
D-74673 Mulfingen
Phone: +49(0)7938/81-0
Fax: +49(0)7938/81-110
info1@de.ebmpapst.com
www.ebmpapst.com

Nominal data

Type	**M4Q045-CF01-01**
Motor	**M4Q045-CF**

Phase		1~	1~
Nominal voltage	V	230	230
Frequency	Hz	50	60
Type of data definition		me	me
Valid for approval / standard		CE	CE
Speed	min^{-1}	1300	1550
Power input	W	60	58
Power output	W	16	16
Current draw	A	0.42	0.36
Rated torque	Ncm	11.5	10
Medium start-up torque	Ncm	5.5	4
Max. ambient temperature	°C	40	40

ml = max. load · me = max. efficiency · rfa = running at free air · cs = customer specs · cu = customer unit
Subject to alterations

Technical features

Leackage current	< 0.75 mA
Size	45 mm
Operation mode	S1
Direction of rotation	Counter-clockwise, seen on rotor
Mounting position	Any
Insulation class	"B"
Cable exit	Lateral
Condensate discharge holes	None
Motor bearing	Calotte bearing
Mass	1.3 kg
Material of end shield	Die-cast aluminium
Motor protection	Thermal overload protector (TOP) wired internally
Product conforming to standard	CE; EN 60335-1
Type of protection	IP 42; Depending on installation and position
Protection class	I
Max. permissible ambient motor temp. (transp./ storage)	+ 80 °C
Min. permissible ambient motor temp. (transp./storage)	- 40 °C
Approval	CCC; GOST; VDE

ebm-papst Mulfingen GmbH & Co. KG · Bachmühle 2 · D-74673 Mulfingen · Phone: +49(0)7938/81-0 · Fax: +49(0)7938/81-110 · info1@de.ebmpapst.com · www.ebmpapst.com

Product drawing

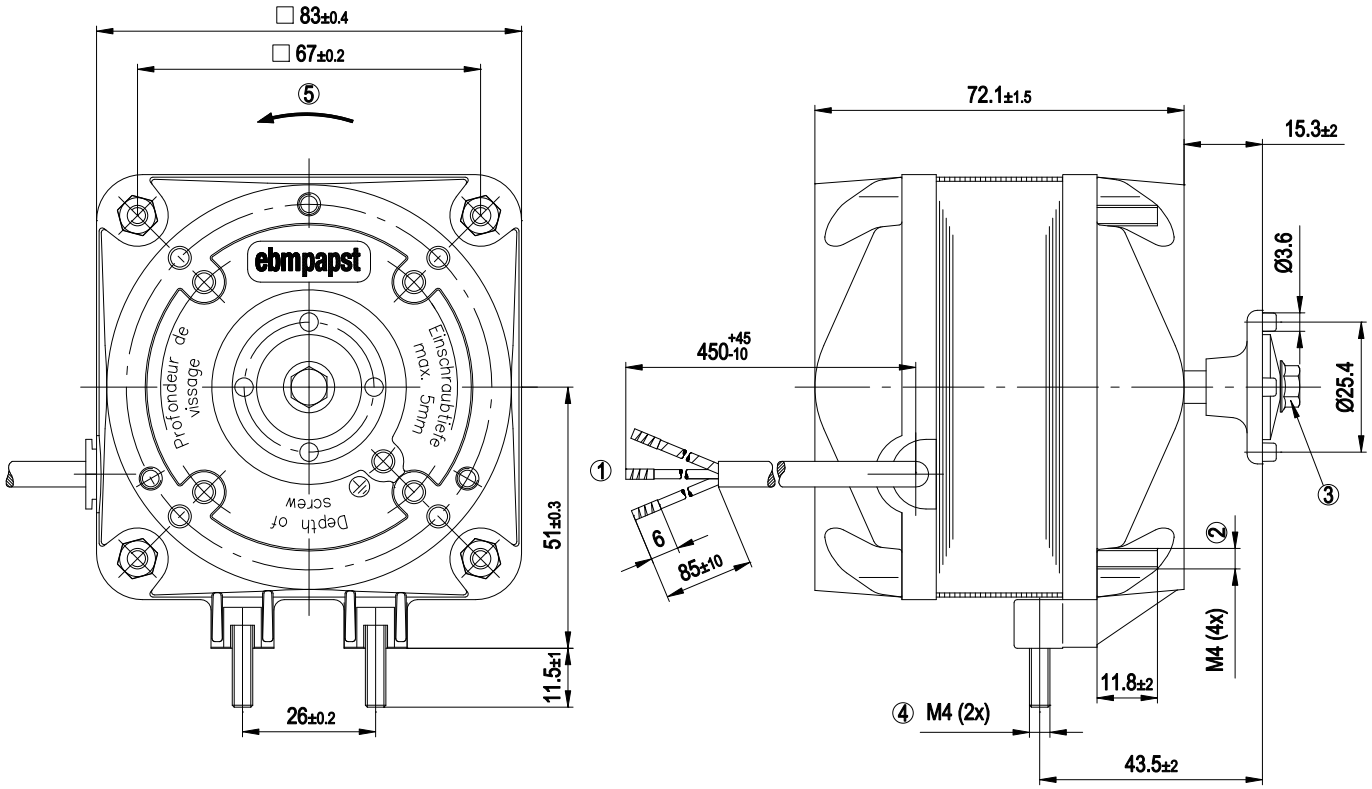

1	Connection line PVC 0.5 mm², 3x brass lead tips crimped
2	Nut tightening torque, for fastening the wall ring or guard grille: 2,3 Nm
3	Screw tightening torque, for fastening the impeller: 1,4 Nm
4	Nut tightening torque, for fastening the mounting bracket: 2,3 Nm
5	Direction of rotation counter-clockwise, seen on shaft end

Connection screen

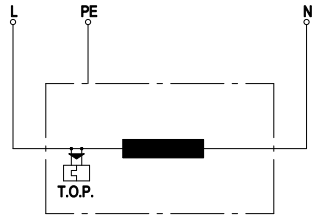

L	= blue
PE	= green / yellow
N	= brown
TOP	= Thermal overload protector

Charts: Speed

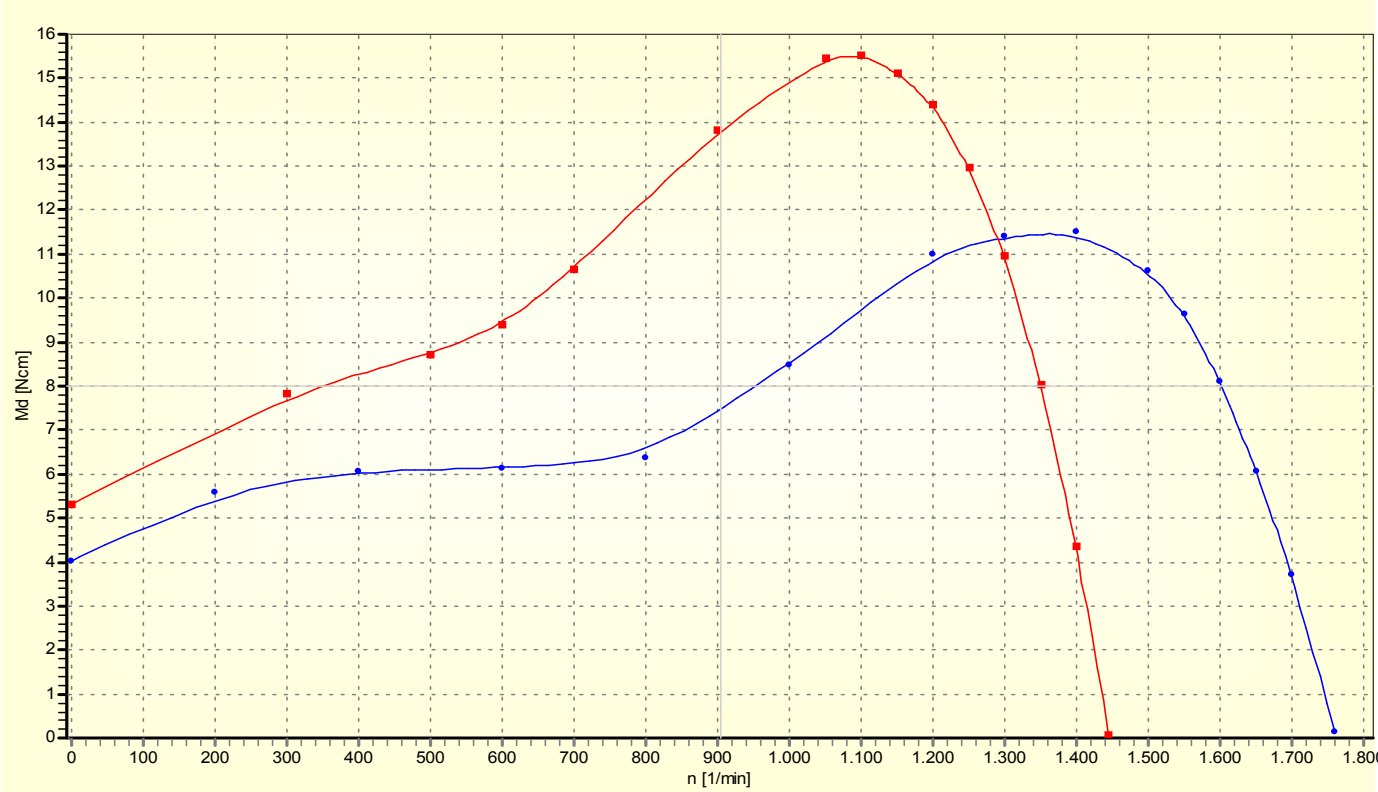

ebm-papst Mulfingen GmbH & Co. KG · Bachmühle 2 · D-74673 Mulfingen · Phone: +49(0)7938/81-0 · Fax: +49(0)7938/81-110 · info1@de.ebmpapst.com · www.ebmpapst.com