AC motor

ebm-papst Mulfingen GmbH & Co. KG
Bachmühle 2
D-74673 Mulfingen
Phone: +49(0)7938/81-0
Fax: +49(0)7938/81-110
info1@de.ebmpapst.com
www.ebmpapst.com

Nominal data

Type	**M4Q045-DA05-01**
Motor	**M4Q045-DA**

Phase		1~	1~
Nominal voltage	[V]	230	230
Frequency	[Hz]	50	60
Type of data definition		me	me
Valid for approval / standard		CE	CE
Speed	[min^{-1}]	1300	1550
Power input	[W]	86	80
Power output	[W]	23	25
Current draw	[A]	0.62	0.55
Rated torque	[Ncm]	17	15.5
Medium start-up torque	[Ncm]	8.5	6.5
Max. ambient temperature	[°C]	40	40

ml = max. load · me = max. efficiency · rfa = running at free air · cs = customer specs · cu = customer unit
Subject to alterations

AC motor

Technical features

Leackage current	< 0.75 mA
Size	45 mm
Operation mode	S1
Direction of rotation	Counter-clockwise, seen on rotor
Mounting position	Shaft horizontal
Insulation class	"B"
Cable exit	Lateral
Condensate discharge holes	None
Bearing motor	Calotte bearing
Mass	1.53 kg
Material of end shield	Die-cast aluminium
Motor protection	Thermal overload protector (TOP) wired internally
Product conforming to standard	CE; EN 60335-1
Type of protection	IP 42
Protection class	I
Max. permissible ambient motor temp. (transp./ storage)	+ 80 °C
Min. permissible ambient motor temp. (transp./storage)	- 40 °C
Approval	GOST; VDE

ebm-papst Mulfingen GmbH & Co. KG · Bachmühle 2 · D-74673 Mulfingen · Phone: +49(0)7938/81-0 · Fax: +49(0)7938/81-110 · info1@de.ebmpapst.com · www.ebmpapst.com

Product drawing

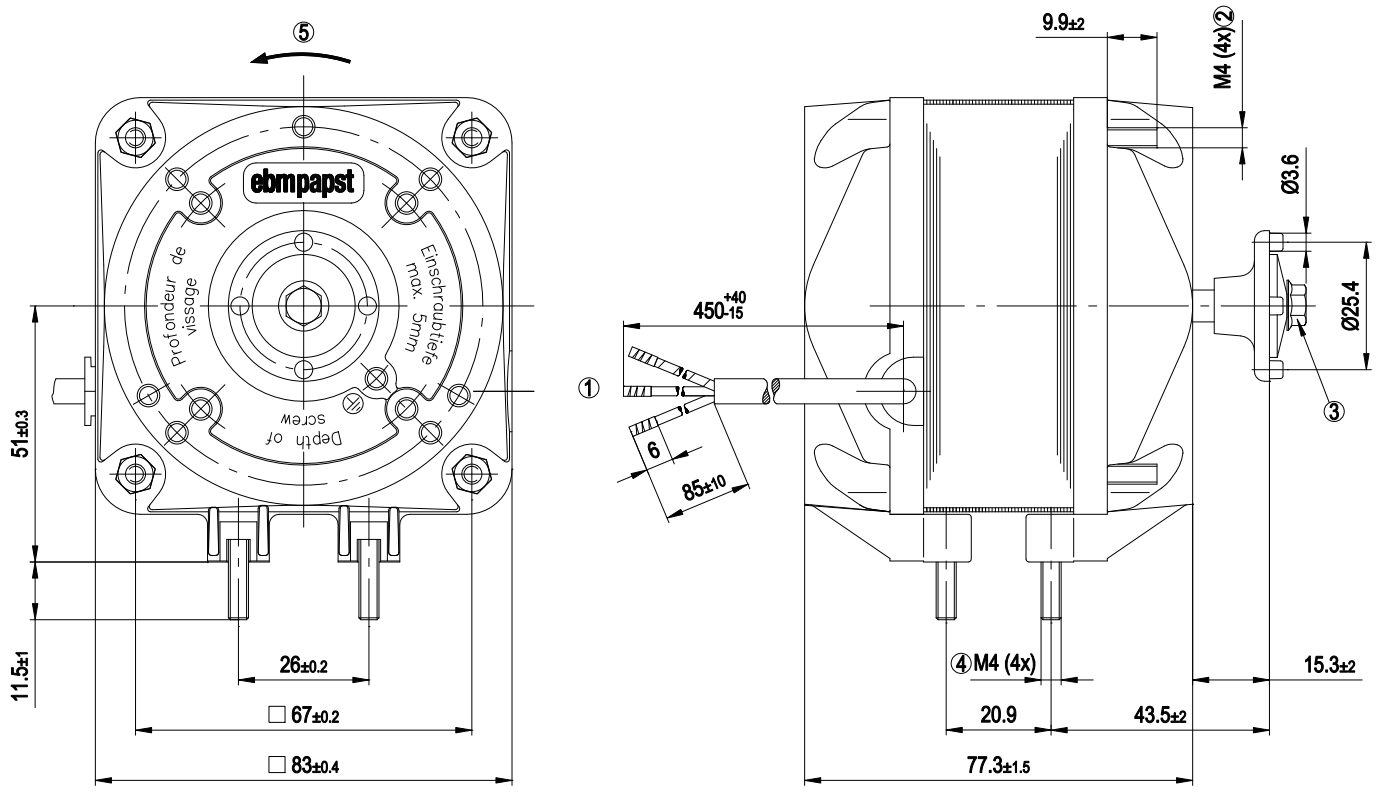

1	Connection line PVC 3 x 0.5 mm²; 3 x brass lead tips crimped
2	Nut tightening torque, for fastening the wall ring or guard grille: 2.3 Nm
3	Screw tightening torque, for fastening the impeller: 1.4 Nm
4	Nut tightening torque, for fastening the mounting bracket: 2.3 Nm
5	Direction of rotation counter-clockwise, seen on shaft end

Connection screen

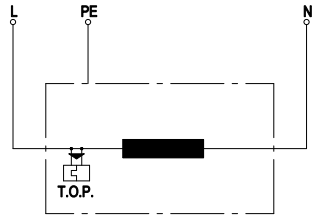

L	= blue
PE	= green / yellow
N	= brown
TOP	= Thermal overload protector

ebm-papst Mulfingen GmbH & Co. KG · Bachmühle 2 · D-74673 Mulfingen · Phone: +49(0)7938/81-0 · Fax: +49(0)7938/81-110 · info1@de.ebmpapst.com · www.ebmpapst.com

Charts: Speed

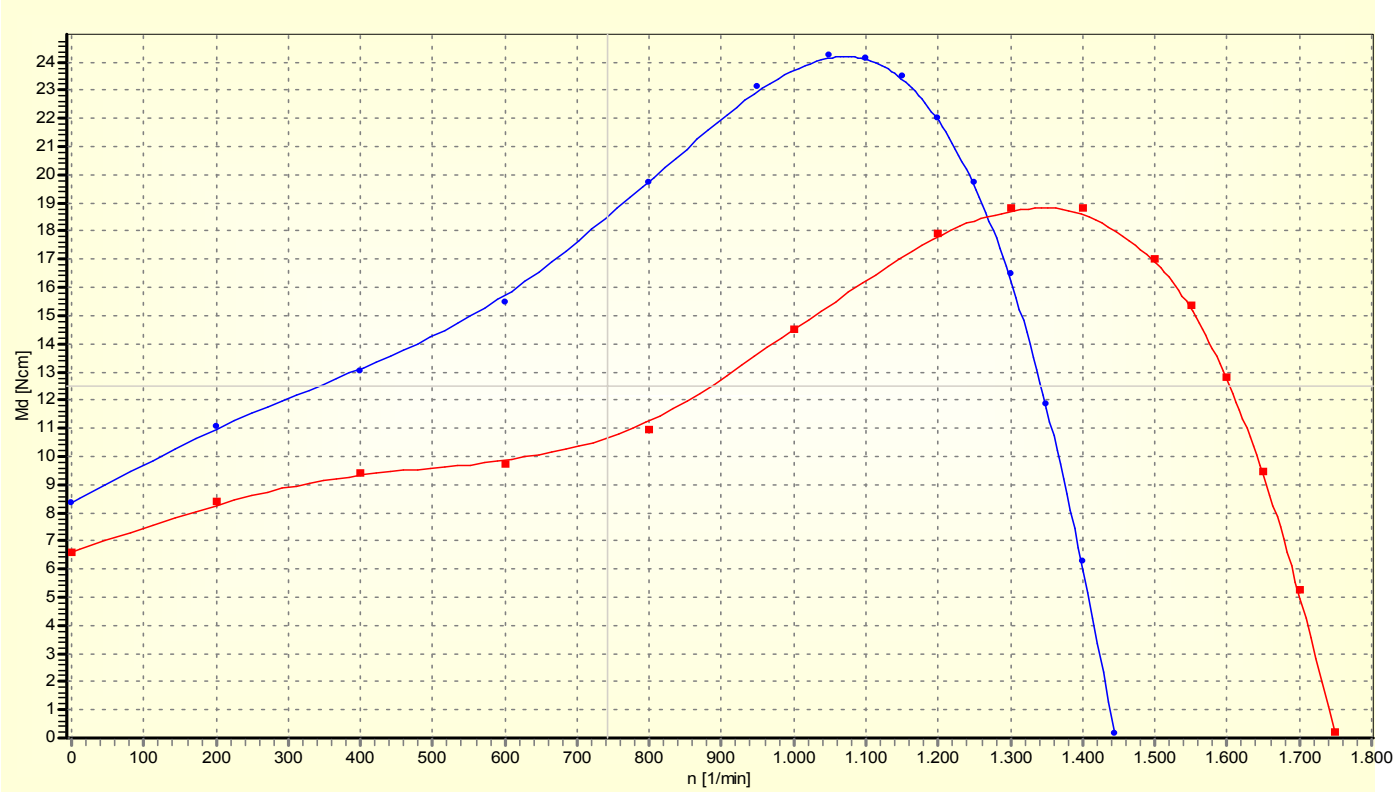

ebm-papst Mulfingen GmbH & Co. KG · Bachmühle 2 · D-74673 Mulfingen · Phone: +49(0)7938/81-0 · Fax: +49(0)7938/81-110 · info1@de.ebmpapst.com · www.ebmpapst.com