AC motor

ebm-papst Mulfingen GmbH & Co. KG
Bachmühle 2 · D-74673 Mulfingen
Phone +49 7938 81-0
Fax +49 7938 81-110
info1@de.ebmpapst.com
www.ebmpapst.com

Limited partnership · Headquarters Mulfingen
County court Stuttgart · HRA 590344

General partner Elektrobau Mulfingen GmbH · Headquarters Mulfingen
County court Stuttgart · HRB 590142

Nominal data

Type	**M4Q045-EF01-01**
Motor	**M4Q045-EF**

Phase		1~	1~
Nominal voltage	VAC	230	230
Frequency	Hz	50	60
Type of data definition		me	me
Valid for approval / standard		CE	CE
Speed	min^{-1}	1300	1550
Power input	W	110	100
Power output	W	34	34
Current draw	A	0.75	0.65
Min. ambient temperature	°C	-30	-30
Max. ambient temperature	°C	40	40
Starting current	A	1.2	0.95

ml = Max. load · me = Max. efficiency · fa = Running at free air · cs = Customer specs · cu = Customer unit
Subject to alterations

Technical features

Mass	2.2 kg
Size	45 mm
Material of end shield	Die-cast aluminium
Direction of rotation	Counter-clockwise, seen on rotor
Type of protection	IP 42; Depending on installation and position
Insulation class	"B"
Max. permissible ambient motor temp. (transp./ storage)	+ 80 °C
Min. permissible ambient motor temp. (transp./storage)	- 40 °C
Mounting position	Any, horizontal preferred
Condensate discharge holes	None
Operation mode	S1
Motor bearing	Calotte bearing
Touch current acc. IEC 60990 (measuring network Fig. 4, TN system)	< 0.75 mA
Motor protection	Thermal overload protector (TOP) wired internally
Cable exit	Lateral
Protection class	I (if protective earth is connected by customer)
Product conforming to standard	EN 60335-1; CE
Approval	VDE

ebm-papst Mulfingen GmbH & Co. KG · Bachmühle 2 · D-74673 Mulfingen · Phone +49 (0) 7938 81-0 · Fax +49 (0) 7938 81-110 · info1@de.ebmpapst.com · www.ebmpapst.com

AC motor

Product drawing

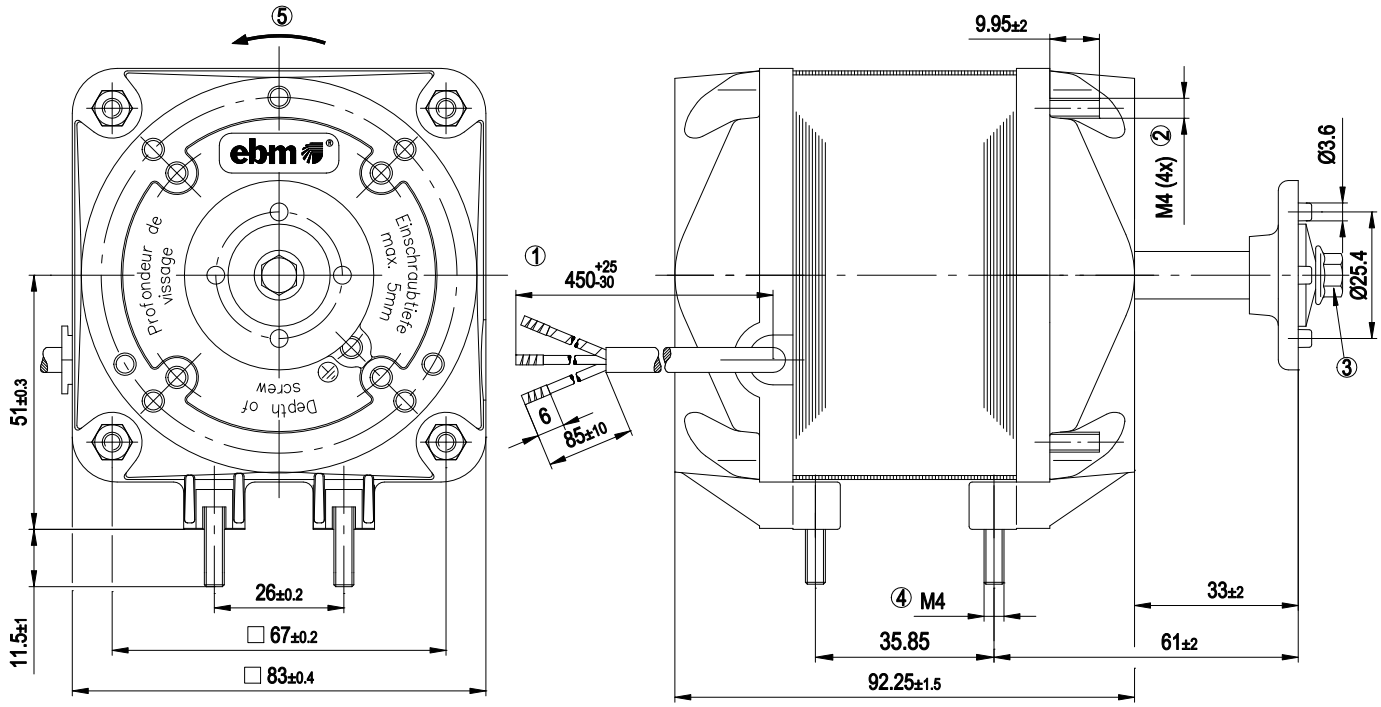

1	Connection line PVC 3G 0.5 mm², 3x brass lead tips crimped
2	Nut tightening torque, for fastening the wall ring or guard grille: 2.3 Nm
3	Screw tightening torque, for fastening the impeller: 1.4 Nm
4	Nut tightening torque, for fastening the mounting bracket: 2.3 Nm
5	Direction of rotation counter-clockwise, seen on shaft end

ebm-papst Mulfingen GmbH & Co. KG · Bachmühle 2 · D-74673 Mulfingen · Phone +49 (0) 7938 81-0 · Fax +49 (0) 7938 81-110 · info1@de.ebmpapst.com · www.ebmpapst.com

Connection screen

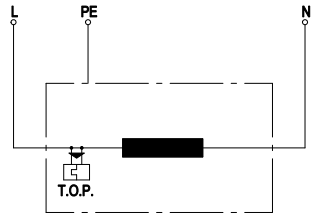

L	= blue
PE	= green / yellow
N	= brown
TOP	= Thermal overload protector

ebm-papst Mulfingen GmbH & Co. KG · Bachmühle 2 · D-74673 Mulfingen · Phone +49 (0) 7938 81-0 · Fax +49 (0) 7938 81-110 · info1@de.ebmpapst.com · www.ebmpapst.com

Charts: Speed

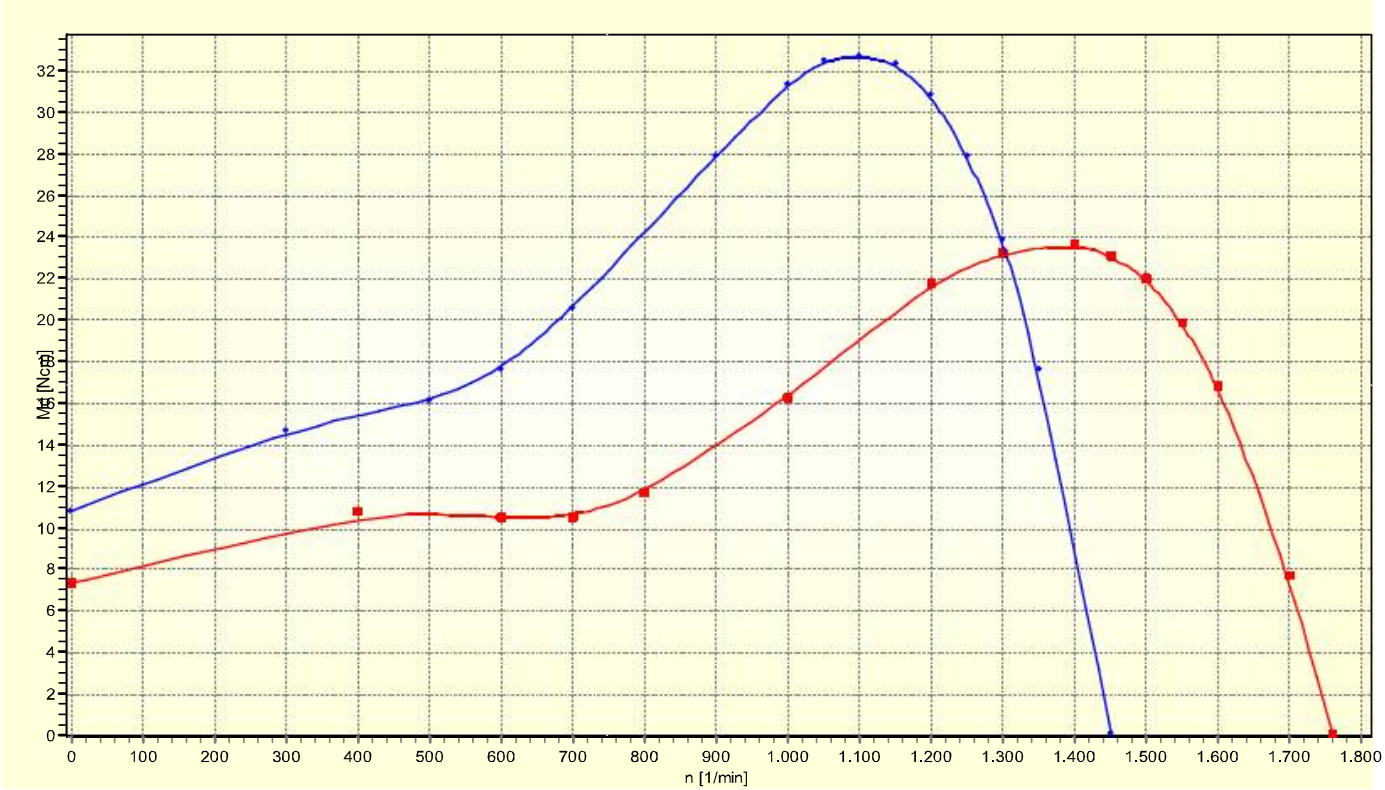

ebm-papst Mulfingen GmbH & Co. KG · Bachmühle 2 · D-74673 Mulfingen · Phone +49 (0) 7938 81-0 · Fax +49 (0) 7938 81-110 · info1@de.ebmpapst.com · www.ebmpapst.com