R2E280-RB01-01

AC centrifugal fan - RadiCal

backward curved

ebm-papst Mulfingen GmbH & Co. KG
Bachmühle 2 · D-74673 Mulfingen
Phone +49 7938 81-0
Fax +49 7938 81-110
info1@de.ebmpapst.com
www.ebmpapst.com

Limited partnership · Headquarters Mulfingen
County court Stuttgart · HRA 590344

General partner Elektrobau Mulfingen GmbH · Headquarters Mulfingen
County court Stuttgart · HRB 590142

Nominal data

Type	**R2E280-RB01-01**	
Motor	**M2E074-GA**	
Phase		1~
Nominal voltage	VAC	230
Frequency	Hz	50
Type of data definition		ml
Valid for approval / standard		CE
Speed	min^{-1}	2300
Power input	W	515
Current draw	A	2.25
Motor capacitor	µF	12
Capacitor voltage	VDB	400
Min. back pressure	Pa	0
Min. ambient temperature	°C	-25
Max. ambient temperature	°C	40
Starting current	A	3.12

ml = max. load · me = max. efficiency · fa = running at free air · cs = customer specs · cu = customer unit
Subject to alterations

AC centrifugal fan - RadiCal

backward curved

Technical features

Mass	4.6 kg
Size	280 mm
Surface of rotor	Coated in black
Material of impeller	PP plastic
Number of blades	6
Direction of rotation	Clockwise, seen on rotor
Type of protection	IP 44; Depending on installation and position as per EN 60034-5
Insulation class	"F"
Humidity class	F1-2
Max. permissible ambient motor temp. (transp./ storage)	+ 80 °C
Min. permissible ambient motor temp. (transp./storage)	- 40 °C
Mounting position	Shaft horizontal or rotor on bottom; rotor on top on request
Condensate discharge holes	Rotor-side
Operation mode	S1
Motor bearing	Ball bearing
Touch current acc. IEC 60990 (measuring network Fig. 4, TN system)	< 0.75 mA
Motor protection	Thermal overload protector (TOP) brought out
Cable exit	Variable
Protection class	I (if protective earth is connected by customer)
Product conforming to standard	EN 60335-1; CE

ebm-papst Mulfingen GmbH & Co. KG · Bachmühle 2 · D-74673 Mulfingen · Phone +49 (0) 7938 81-0 · Fax +49 (0) 7938 81-110 · info1@de.ebmpapst.com · www.ebmpapst.com

AC centrifugal fan - RadiCal

backward curved

Product drawing

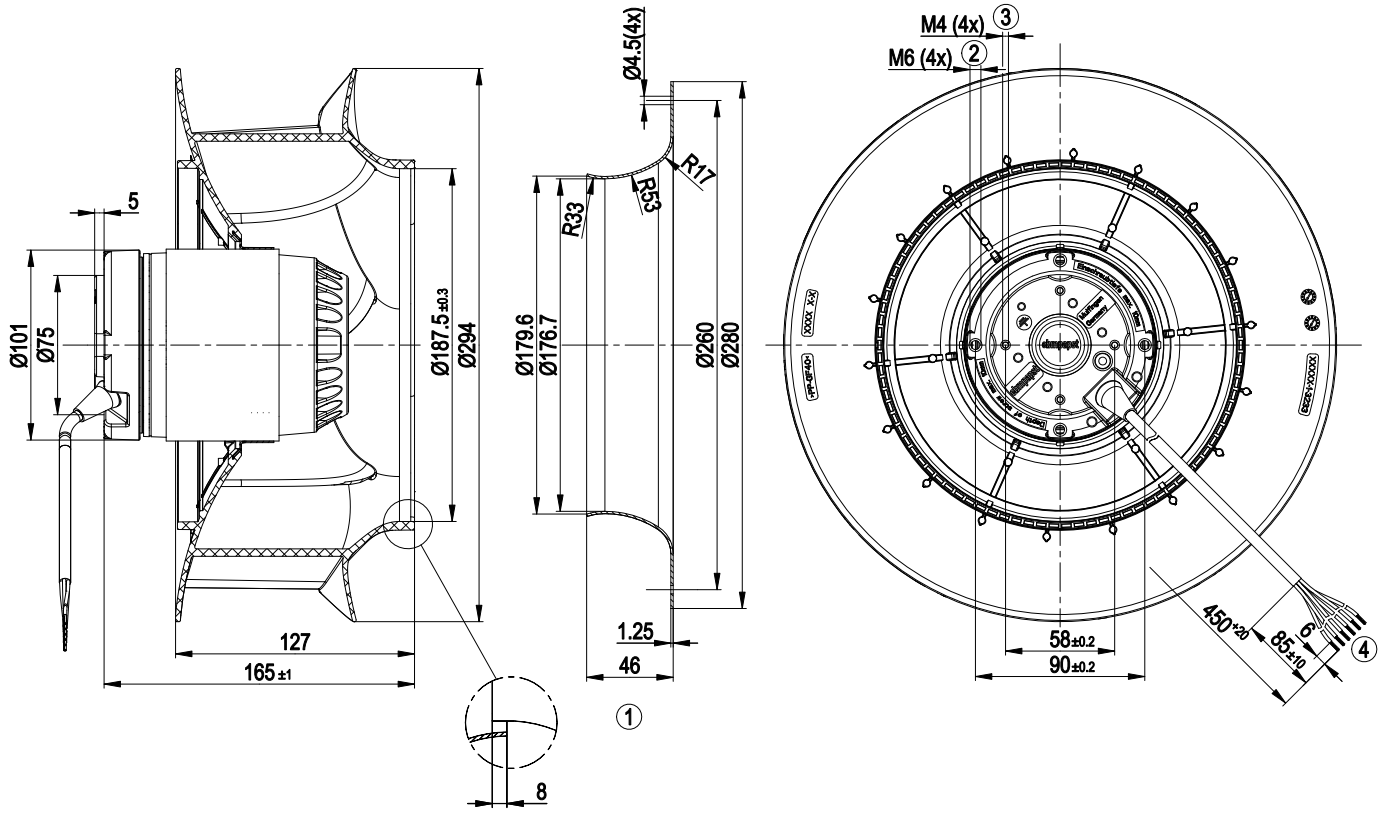

1	Accessory part: Inlet nozzle 28000-2-4013, not included in the standard scope of delivery
2	Depth of screw max. 10 mm
3	Depth of screw max. 6 mm
4	Connection line silicone 6G 0.5 mm², 6 x brass lead tips crimped

ebm-papst Mulfingen GmbH & Co. KG · Bachmühle 2 · D-74673 Mulfingen · Phone +49 (0) 7938 81-0 · Fax +49 (0) 7938 81-110 · info1@de.ebmpapst.com · www.ebmpapst.com

AC centrifugal fan - RadiCal

backward curved

Connection screen

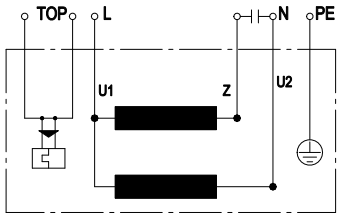

U1	Blue	Z	brown	U2	black
PE	green/yellow	TOP	2 x grey		

ebm-papst Mulfingen GmbH & Co. KG · Bachmühle 2 · D-74673 Mulfingen · Phone +49 (0) 7938 81-0 · Fax +49 (0) 7938 81-110 · info1@de.ebmpapst.com · www.ebmpapst.com

AC centrifugal fan - RadiCal

backward curved

Charts: Air flow 50 Hz

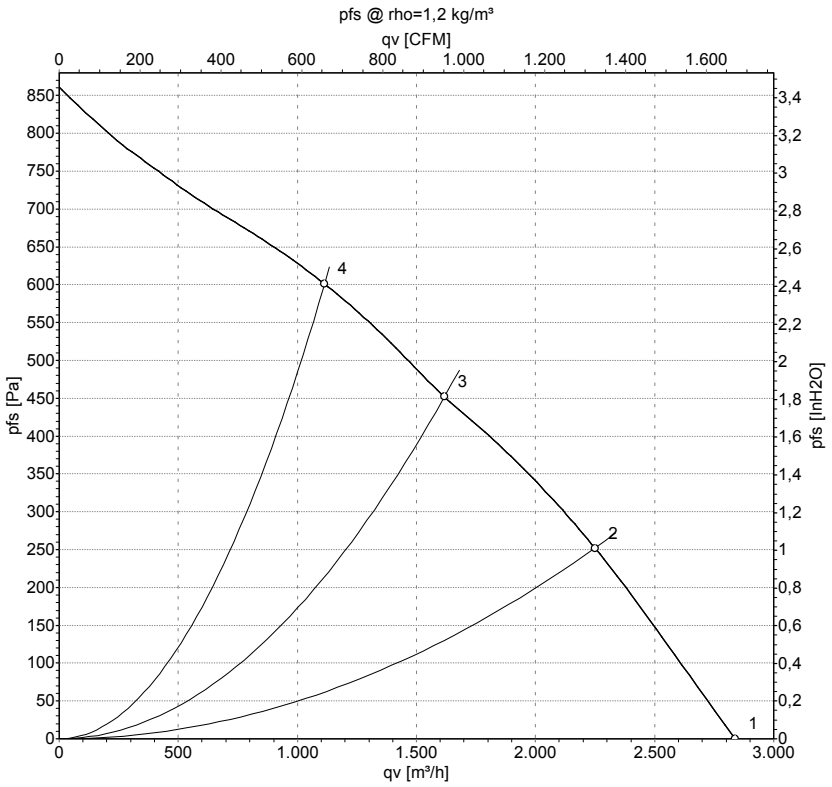

Measurement: LU-138289

Air performance measured as per ISO 5801 Installation category A. For detailed information on the measuring set-up, please contact ebm-papst. Suction-side noise levels: LwA measured as per ISO 13347 / LpA measured with 1m distance to fan axis. The values given are valid under the measuring conditions mentioned above and may vary according to the actual installation situation. With any deviation from the standard set-up, the specific values have to be checked and reviewed with the unit installed.

Measured values

	U	f	n	P_e	I	qv	p_{fs}
	V	Hz	min^{-1}	W	A	m^3/h	Pa
1	230	50	2525	440	1.91	2835	0
2	230	50	2385	494	2.14	2250	250
3	230	50	2300	515	2.25	1620	450
4	230	50	2415	480	2.08	1115	600

U = Supply voltage · f = Frequency · n = Speed · P_e = Power input · I = Current draw · qv = Air flow · p_{fs} = Pressure increase

ebm-papst Mulfingen GmbH & Co. KG · Bachmühle 2 · D-74673 Mulfingen · Phone +49 (0) 7938 81-0 · Fax +49 (0) 7938 81-110 · info1@de.ebmpapst.com · www.ebmpapst.com