R4E400-RO09-01

AC centrifugal fan - RadiCal

backward curved, single inlet

ebm-papst Mulfingen GmbH & Co. KG
Bachmühle 2 · D-74673 Mulfingen
Phone +49 7938 81-0
Fax +49 7938 81-110
info1@de.ebmpapst.com
www.ebmpapst.com

Limited partnership · Headquarters Mulfingen
County court Stuttgart · HRA 590344

General partner Elektrobau Mulfingen GmbH · Headquarters Mulfingen
County court Stuttgart · HRB 590142

ErP2015 EXCEEDS THE NORM

Nominal data

Type	**R4E400-RO09-01**
Motor	**M4E094-HA**

Phase		1~	1~
Nominal voltage	VAC	230	230
Frequency	Hz	50	60
Type of data definition		ml	ml
Valid for approval / standard		CE	CE
Speed	min^{-1}	1340	1400
Power input	W	470	660
Current draw	A	2.05	3.05
Motor capacitor	µF	9	9
Capacitor voltage	VDB	400	400
Capacitor standard		P0 (CE)	P0 (CE)
Min. back pressure	Pa	0	0
Min. ambient temperature	°C	-40	-40
Max. ambient temperature	°C	60	45
Starting current	A	5.67	5.1

ml = max. load · me = max. efficiency · fa = running at free air · cs = customer specs · cu = customer unit
Subject to alterations

Data according to ErP directive

Installation category	A
Efficiency category	Static
Variable speed drive	No
Specific ratio*	1.00

* Specific ratio = 1 + p_{fs} / 100 000 Pa

		Actual	Request 2013	Request 2015
Overall efficiency η_{es}		48.6	44.2	48.2
Efficiency grade N		62.4	58	62
Power input P_e	kW	0.48		
Air flow q_v	m^3/h	2810		
Pressure increase p_{fs}	Pa	306		
Speed n	min^{-1}	1390		

Data established at point of optimum efficiency

AC centrifugal fan - RadiCal

backward curved, single inlet

Technical features

Mass	8.5 kg
Size	400 mm
Surface of rotor	Coated in black
Material of impeller	PP plastic
Number of blades	6
Direction of rotation	Clockwise, seen on rotor
Type of protection	IP 54
Insulation class	"F"
Humidity class	F4-1
Max. permissible ambient motor temp. (transp./ storage)	+80 °C
Min. permissible ambient motor temp. (transp./storage)	-40 °C
Mounting position	Any
Condensate discharge holes	None
Operation mode	S1
Motor bearing	Ball bearing
Leakage current	<= 3.5 mA
Motor protection	Thermal overload protector (TOP) brought out
Cable exit	Variable
Protection class	I (if protective earth is connected by customer)
Product conforming to standard	EN 60034-1 (2004); CE

ebm-papst Mulfingen GmbH & Co. KG · Bachmühle 2 · D-74673 Mulfingen · Phone +49 7938 81-0 · Fax +49 7938 81-110 · info1@de.ebmpapst.com · www.ebmpapst.com

AC centrifugal fan - RadiCal

backward curved, single inlet

Product drawing

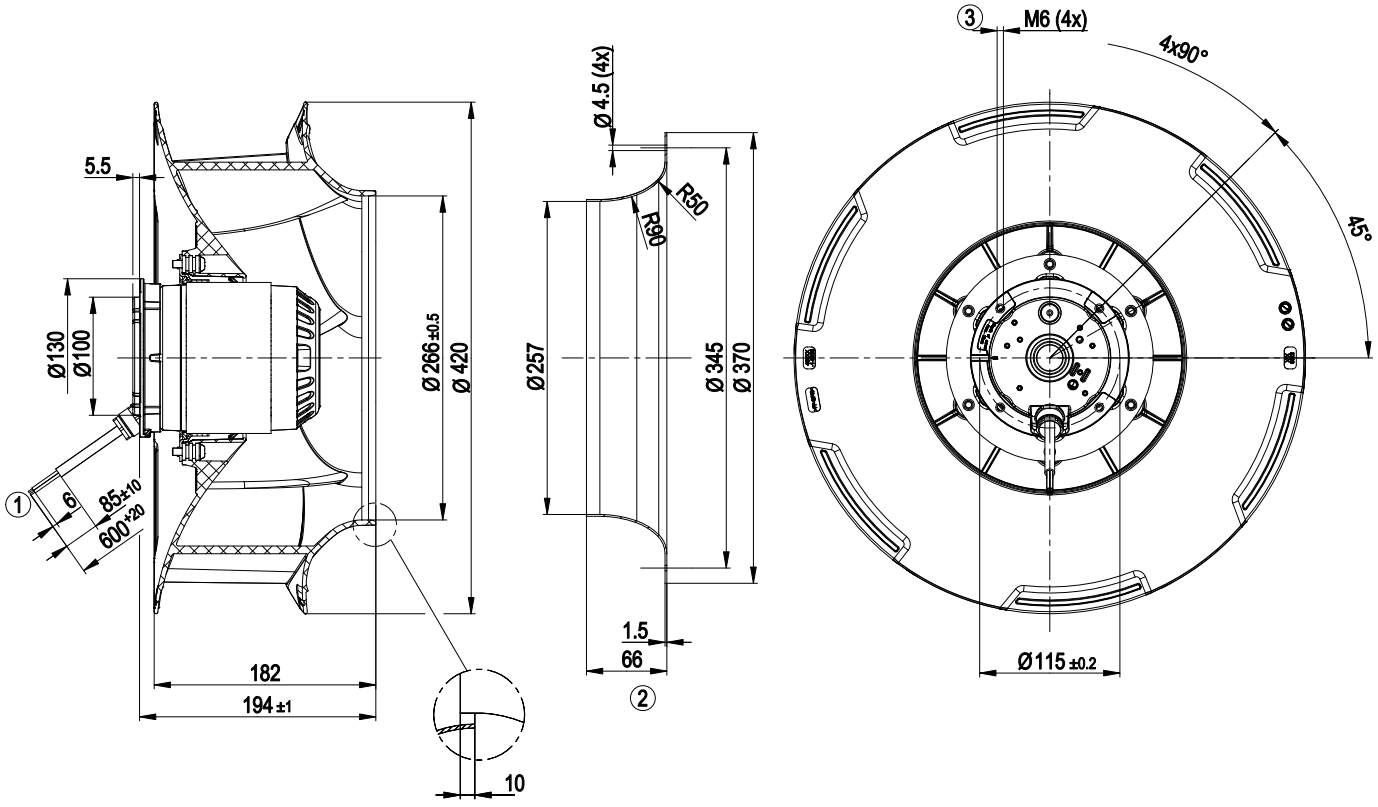

1	Connection line silicone 6G 0.5 mm², 6x brass lead tips crimped
2	Accessory part: Inlet nozzle 54476-2-4013, not included in the standard scope of delivery.
3	Depth of screw max. 12 mm

ebm-papst Mulfingen GmbH & Co. KG · Bachmühle 2 · D-74673 Mulfingen · Phone +49 7938 81-0 · Fax +49 7938 81-110 · info1@de.ebmpapst.com · www.ebmpapst.com

AC centrifugal fan - RadiCal

backward curved, single inlet

Connection screen

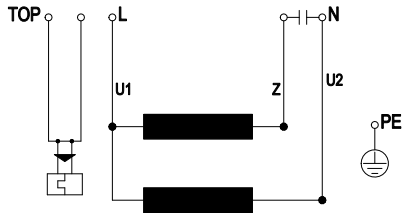

TOP	2 x grey	U1	blue	Z	brown
U2	black	PE	green / yellow		

ebm-papst Mulfingen GmbH & Co. KG · Bachmühle 2 · D-74673 Mulfingen · Phone +49 7938 81-0 · Fax +49 7938 81-110 · info1@de.ebmpapst.com · www.ebmpapst.com

AC centrifugal fan - RadiCal

backward curved, single inlet

Charts: Air flow 50 Hz

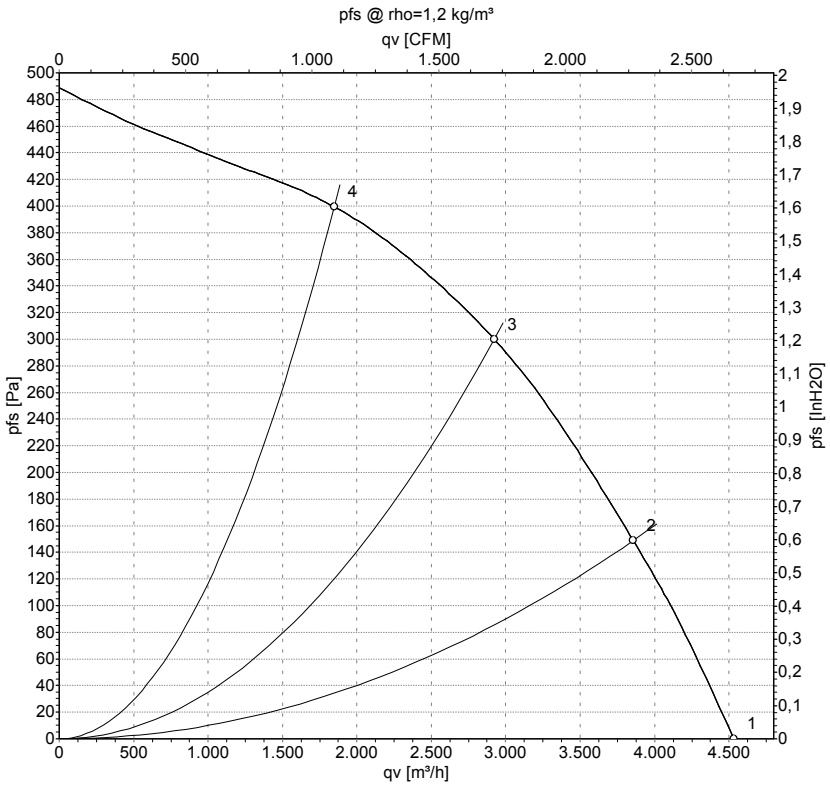

Measurement: LU-141329

Air performance measured as per ISO 5801 Installation category A. For detailed information on the measuring set-up, please contact ebm-papst. Suction-side noise levels: LwA measured as per ISO 13347 / LpA measured with 1m distance to fan axis. The values given are valid under the measuring conditions mentioned above and may vary according to the actual installation situation. With any deviation from the standard set-up, the specific values have to be checked and reviewed with the unit installed.

Measured values

	U	f	n	P_e	I	LpA_{in}	LwA_{in}	qv	p_{fs}
	V	Hz	min^{-1}	W	A	dB(A)	dB(A)	m^3/h	Pa
1	230	50	1425	390	2.01	73	80	4530	0
2	230	50	1405	440	2.17	67	74	3855	150
3	230	50	1390	490	2.37	61	69	2920	300
4	230	50	1400	460	2.25	59	67	1850	400

U = Supply voltage · f = Frequency · n = Speed · P_e = Power input · I = Current draw · LpA_{in} = Sound pressure level inlet side · LwA_{in} = Sound power level inlet side · qv = Air flow
p_{fs} = Pressure increase

ebm-papst Mulfingen GmbH & Co. KG · Bachmühle 2 · D-74673 Mulfingen · Phone +49 7938 81-0 · Fax +49 7938 81-110 · info1@de.ebmpapst.com · www.ebmpapst.com

AC centrifugal fan - RadiCal

backward curved, single inlet

Charts: Air flow 60 Hz

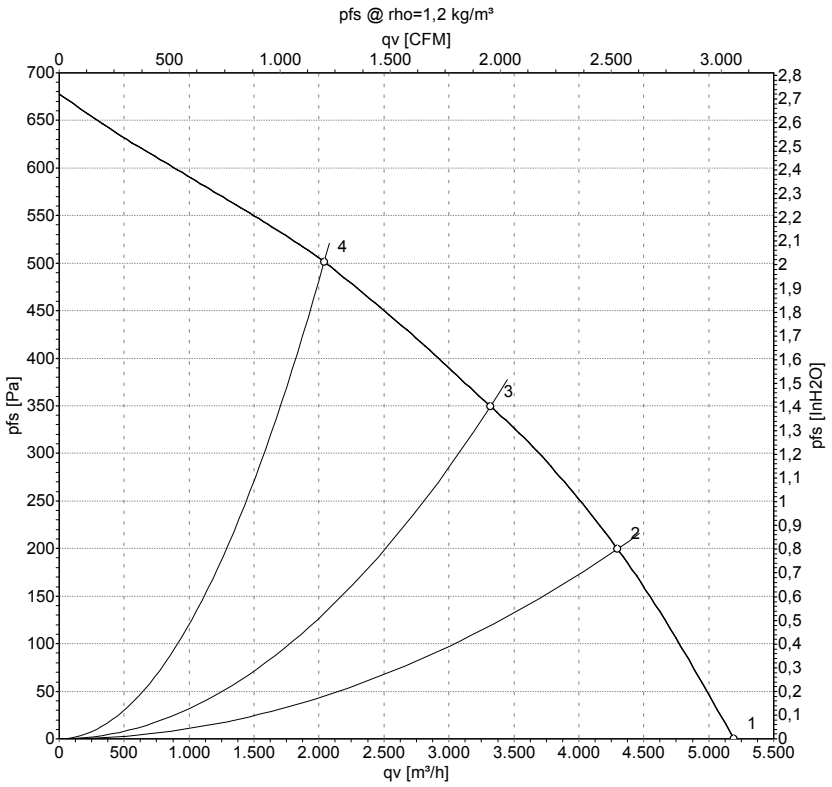

Measurement: LU-141330

Air performance measured as per ISO 5801 Installation category A. For detailed information on the measuring set-up, please contact ebm-papst. Suction-side noise levels: LwA measured as per ISO 13347 / LpA measured with 1m distance to fan axis. The values given are valid under the measuring conditions mentioned above and may vary according to the actual installation situation. With any deviation from the standard set-up, the specific values have to be checked and reviewed with the unit installed.

Measured values

	U	f	n	P_e	I	LpA_{in}	LwA_{in}	qv	p_{fs}
	V	Hz	min^{-1}	W	A	dB(A)	dB(A)	m^3/h	Pa
1	230	60	1635	580	2.55	76	83	5195	0
2	230	60	1575	673	2.99	68	76	4300	200
3	230	60	1530	740	3.32	62	70	3320	350
4	230	60	1560	688	3.06	61	70	2040	500

U = Supply voltage · f = Frequency · n = Speed · P_e = Power input · I = Current draw · LpA_{in} = Sound pressure level inlet side · LwA_{in} = Sound power level inlet side · qv = Air flow
p_{fs} = Pressure increase

ebm-papst Mulfingen GmbH & Co. KG · Bachmühle 2 · D-74673 Mulfingen · Phone +49 7938 81-0 · Fax +49 7938 81-110 · info1@de.ebmpapst.com · www.ebmpapst.com