S4D350-AN08-31

AC axial fan

sickled blades (S series)

with guard grille for short nozzle

ebm-papst Mulfingen GmbH & Co. KG
Bachmühle 2 · D-74673 Mulfingen
Phone +49 7938 81-0
Fax +49 7938 81-110
info1@de.ebmpapst.com
www.ebmpapst.com

Limited partnership · Headquarters Mulfingen
County court Stuttgart · HRA 590344

General partner Elektrobau Mulfingen GmbH · Headquarters Mulfingen
County court Stuttgart · HRB 590142

ErP2015 EXCEEDS THE NORM

Nominal data

Type	**S4D350-AN08-31**
Motor	**M4D074-DF**

Phase		3~	3~	3~	3~
Nominal voltage	VAC	230	230	400	400
Connection		Δ	Δ	Y	Y
Frequency	Hz	50	60	50	60
Type of data definition		ml	ml	ml	ml
Valid for approval / standard		CE	CE	CE	CE
Speed	min^{-1}	1370	1520	1370	1520
Power input	W	170	230	170	230
Current draw	A	0.64	0.70	0.37	0.40
Max. back pressure	Pa	90	90	90	90
Min. ambient temperature	°C	-25	-25	-25	-25
Max. ambient temperature	°C	65	55	65	55
Starting current	A	1.9	1.9	1.1	1.1

ml = Max. load · me = Max. efficiency · fa = Running at free air · cs = Customer specs · cu = Customer unit
Subject to alterations

Data according to ErP directive

Installation category	A
Efficiency category	Static
Variable speed drive	No
Specific ratio*	1.00

* Specific ratio = 1 + p_{fs} / 100 000 Pa

		Actual	Request 2013	Request 2015
Overall efficiency η_{es}	%	28.7	24.6	28.6
Efficiency grade N		40.1	36	40
Power input P_e	kW	0.16		
Air flow q_v	m^3/h	2105		
Pressure increase p_{fs}	Pa	82		
Speed n	min^{-1}	1375		

Data definition with optimum efficiency. LU-131044
The ErP data is determined using a motor-impeller combination in a standardised measurement configuration.

ebmpapst

AC axial fan

sickled blades (S series)

with guard grille for short nozzle

Technical features

Mass	4.8 kg
Size	350 mm
Surface of rotor	Coated in black
Material of blades	Press-fitted sheet steel blank, sprayed with PP plastic
Material of guard grille	Steel, phosphated and coated with black plastic
Number of blades	5
Direction of air flow	"A"
Direction of rotation	Clockwise, seen on rotor
Type of protection	IP 44; Depending on installation and position as per EN 60034-5
Insulation class	"F"
Humidity class	F1-2
Max. permissible ambient motor temp. (transp./ storage)	+ 80 °C
Min. permissible ambient motor temp. (transp./storage)	- 40 °C
Mounting position	Shaft horizontal or rotor on bottom; rotor on top on request
Condensate discharge holes	Rotor-side
Operation mode	S1
Motor bearing	Ball bearing
Touch current acc. IEC 60990 (measuring network Fig. 4, TN system)	< 0.75 mA
Cable exit	Variable
Protection class	I (if protective earth is connected by customer)
Product conforming to standard	EN 60335-1
Approval	CCC

ebm-papst Mulfingen GmbH & Co. KG · Bachmühle 2 · D-74673 Mulfingen · Phone +49 (0) 7938 81-0 · Fax +49 (0) 7938 81-110 · info1@de.ebmpapst.com · www.ebmpapst.com

AC axial fan

sickled blades (S series)

with guard grille for short nozzle

Product drawing

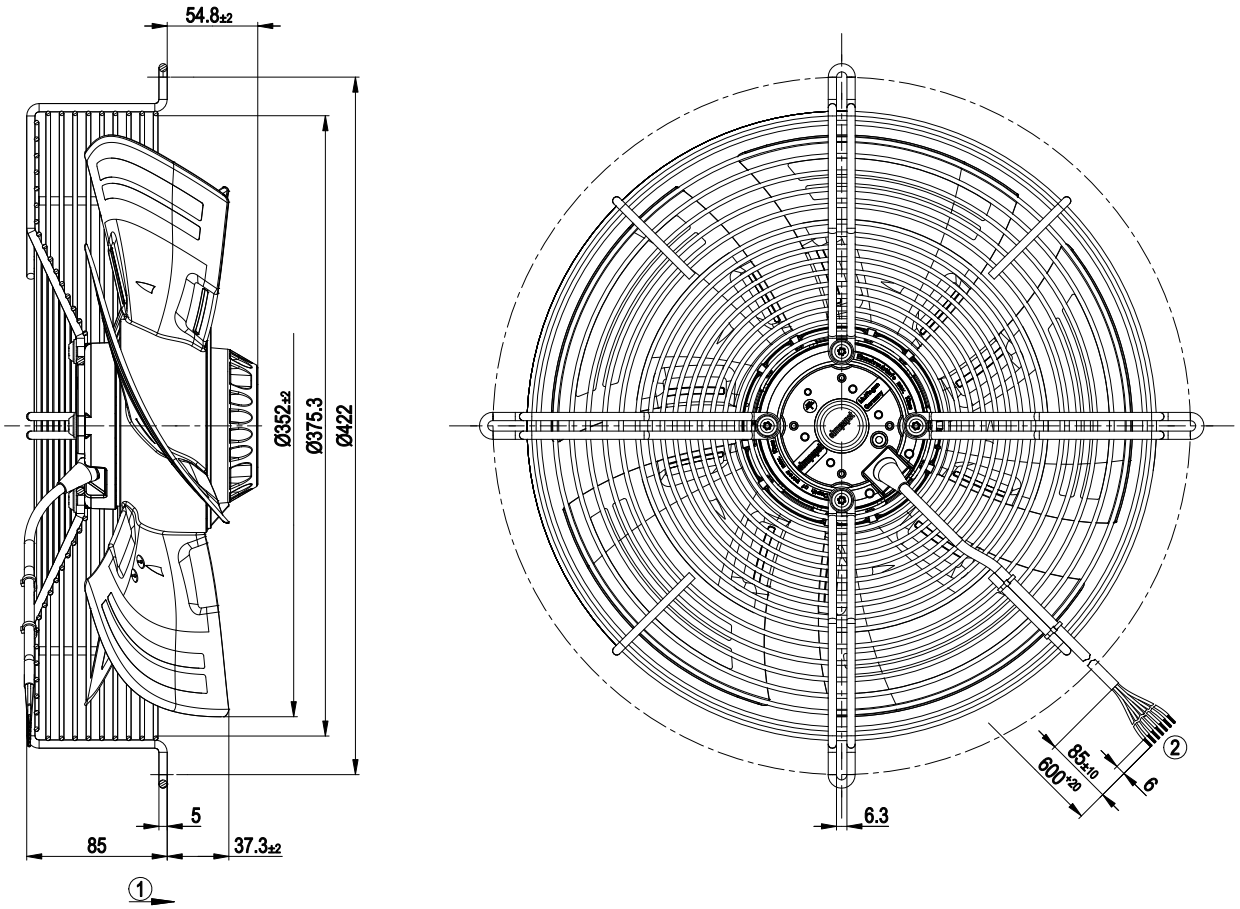

1	Direction of air flow "A"
2	Connection line PFA AWG 20 (gn/ye AWG 18), 7x lead tips crimped

ebm-papst Mulfingen GmbH & Co. KG · Bachmühle 2 · D-74673 Mulfingen · Phone +49 (0) 7938 81-0 · Fax +49 (0) 7938 81-110 · info1@de.ebmpapst.com · www.ebmpapst.com

AC axial fan

sickled blades (S series)

with guard grille for short nozzle

Connection screen

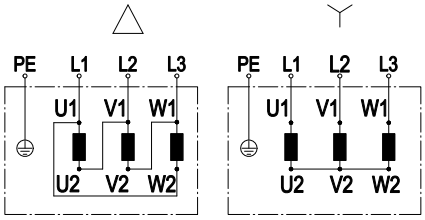

Change direction of rotation by reversing two phases

	Three-phase motor	Δ	Delta connection	Y	Star connection
L1	= U1 = black	L2	= V1 = blue	L3	= W1 = brown
U2	green	V2	white	W2	yellow
PE	green/yellow				

ebm-papst Mulfingen GmbH & Co. KG · Bachmühle 2 · D-74673 Mulfingen · Phone +49 (0) 7938 81-0 · Fax +49 (0) 7938 81-110 · info1@de.ebmpapst.com · www.ebmpapst.com

AC axial fan

sickled blades (S series)

with guard grille for short nozzle

Charts: Air flow 50 Hz

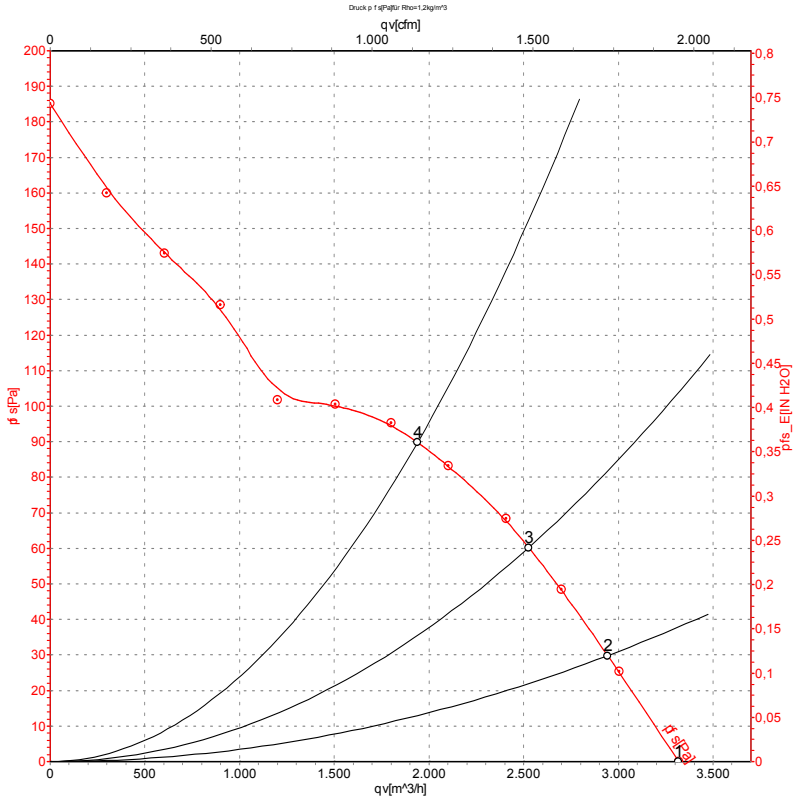

Air performance measured as per ISO 5801 Installation category A. For detailed information on the measuring set-up, please contact ebm-papst. Suction-side noise levels: LwA measured as per ISO 13347 / LpA measured with 1m distance to fan axis. The values given are valid under the measuring conditions mentioned above and may vary according to the actual installation situation. With any deviation from the standard set-up, the specific values have to be checked and reviewed with the unit installed.

Measured values

	Conn.	U	f	n	P_e	I	LpA_{in}	LwA_{in}	qv	p_{fs}
		V	Hz	min^{-1}	W	A	dB(A)	dB(A)	m^3/h	Pa
1	Y	400	50	1400	140	0.36	61	69	3320	0
2	Y	400	50	1395	147	0.36	59	66	2945	30
3	Y	400	50	1380	157	0.36	56	64	2525	60
4	Y	400	50	1370	170	0.37	55	64	1940	90

Conn. = Connection · U = Supply voltage · f = Frequency · n = Speed · P_e = Power input · I = Current draw · LpA_{in} = Sound pressure level inlet side · LwA_{in} = Sound power level inlet side
qv = Air flow · p_{fs} = Pressure increase

ebm-papst Mulfingen GmbH & Co. KG · Bachmühle 2 · D-74673 Mulfingen · Phone +49 (0) 7938 81-0 · Fax +49 (0) 7938 81-110 · info1@de.ebmpapst.com · www.ebmpapst.com

AC axial fan

sickled blades (S series)

with guard grille for short nozzle

Charts: Air flow 60 Hz

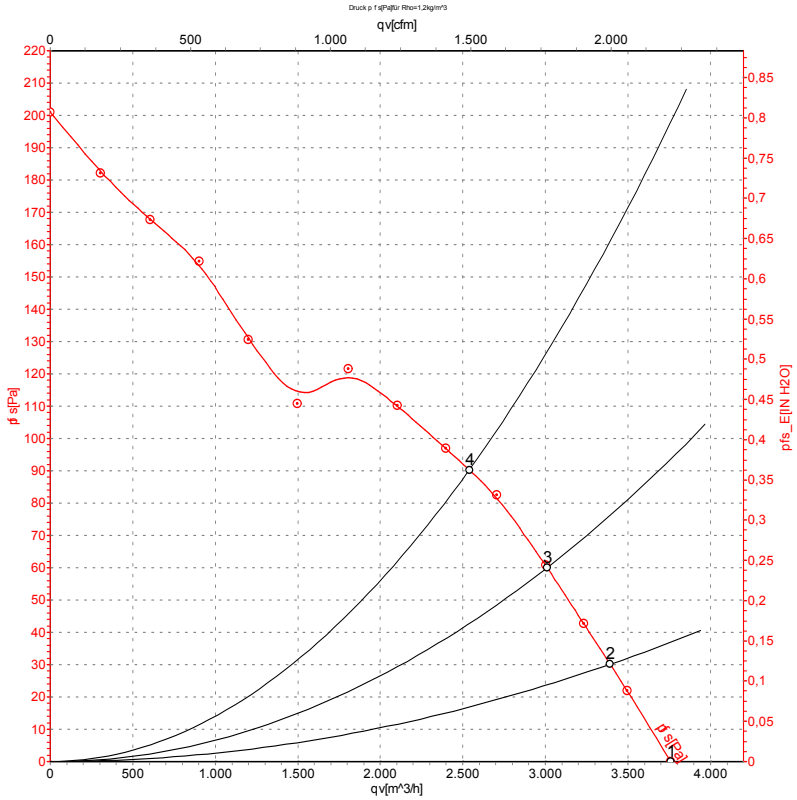

Air performance measured as per ISO 5801 Installation category A. For detailed information on the measuring set-up, please contact ebm-papst. Suction-side noise levels: LwA measured as per ISO 13347 / LpA measured with 1m distance to fan axis. The values given are valid under the measuring conditions mentioned above and may vary according to the actual installation situation. With any deviation from the standard set-up, the specific values have to be checked and reviewed with the unit installed.

Measured values

	Conn.	U	f	n	P_e	I	LpA_{in}	LwA_{in}	qv	p_{fs}
		V	Hz	min^{-1}	W	A	dB(A)	dB(A)	m^3/h	Pa
1	Y	400	60	1600	185	0.36	64	72	3760	0
2	Y	400	60	1575	200	0.36	62	69	3390	30
3	Y	400	60	1550	214	0.37	60	67	3010	60
4	Y	400	60	1520	230	0.40	58	66	2540	90

Conn. = Connection · U = Supply voltage · f = Frequency · n = Speed · P_e = Power input · I = Current draw · LpA_{in} = Sound pressure level inlet side · LwA_{in} = Sound power level inlet side
qv = Air flow · p_{fs} = Pressure increase

ebm-papst Mulfingen GmbH & Co. KG · Bachmühle 2 · D-74673 Mulfingen · Phone +49 (0) 7938 81-0 · Fax +49 (0) 7938 81-110 · info1@de.ebmpapst.com · www.ebmpapst.com