S4D500-AE03-01

AC axial fan

sickle-shaped blades (S series)

with guard grille for short nozzle

ebm-papst Mulfingen GmbH & Co. KG
Bachmühle 2 · D-74673 Mulfingen
Phone +49 7938 81-0
Fax +49 7938 81-110
info1@de.ebmpapst.com
www.ebmpapst.com

Limited partnership · Headquarters Mulfingen
Amtsgericht (court of registration) Stuttgart · HRA 590344

General partner Elektrobau Mulfingen GmbH · Headquarters Mulfingen
Amtsgericht (court of registration) Stuttgart · HRB 590142

Nominal data

Type	**S4D500-AE03-01**
Motor	**M4D110-GF**

Phase		3~	3~	3~	3~
Nominal voltage	VAC	400	400	480	480
Wiring		Δ	Y	Δ	Y
Frequency	Hz	50	50	60	60
Method of obtaining data		ml	ml	ml	ml
Valid for approval/standard		CE	CE	CE	CE
Speed (rpm)	min^{-1}	1360	1110	1600	1240
Power consumption	W	690	490	1100	740
Current draw	A	1.43	0.86	1.72	1.08
Max. back pressure	Pa	160	105	215	125
Max. back pressure	in. wg	0.64	0.42	0.86	0.5
Min. ambient temperature	°C	-40	-40	-40	-40
Max. ambient temperature	°C	90	90	55	55
Starting current	A	6.5		7.5	

ml = Max. load · me = Max. efficiency · fa = Free air · cs = Customer specification · ce = Customer equipment
Subject to change

Data according to Commission Regulation (EU) 327/2011 (EN 17166)

		Actual	Req. 2015
01 Overall efficiency η_{es}	%	33.3	32.5
02 Measurement category		A	
03 Efficiency category		Static	
04 Efficiency grade N		40.8	40
05 Variable speed drive		No	

09 Power consumption P_e	kW	0.66
09 Air flow q_v	m^3/h	5600
09 Pressure increase p_{fs}	Pa	149
10 Speed (rpm) n	min^{-1}	1370
11 Specific ratio*		1.00

Data obtained at optimum efficiency level.
The ErP data is determined using a motor-impeller combination in a standardized measurement setup.

* Specific ratio = 1 + p_{fs} / 100 000 Pa

LU-114904

AC axial fan

sickle-shaped blades (S series)

with guard grille for short nozzle

Technical description

Weight	13.4 kg
Size	500 mm
Motor size	110
Rotor surface	Cast in aluminum
Terminal box material	PP plastic
Blade material	Sheet aluminum
Guard grille material	Steel, coated with black plastic (RAL 9005)
Number of blades	5
Blade pitch	-5°
Airflow direction	V
Direction of rotation	Counterclockwise, viewed toward rotor
Degree of protection	IP54
Insulation class	"F"
Moisture (F) / Environmental (H) protection class	H2
Ambient temperature note	Occasional start-up at temperatures between -40°C and -25°C is permitted. For continuous operation at ambient temperatures below -25°C (such as refrigeration applications), use must be made of a fan design with special low-temperature bearings.
Max. permitted ambient temp. for motor (transport/storage)	+80 °C
Min. permitted ambient temp. for motor (transport/storage)	-40 °C
Installation position	Shaft horizontal or rotor on bottom; rotor on top on request
Condensation drainage holes	On rotor side
Mode	S1
Motor bearing	Ball bearing
Touch current according to IEC 60990 (measuring circuit Fig. 4, TN system)	<= 3.5 mA
Electrical hookup	Terminal box
Motor protection	Thermal overload protector (TOP) with basic insulation
With cable	Axial
Protection class	I (with customer connection of protective earth)
Conformity with standards	EN 60034-1 (2010); CE
Approval	VDE; EAC

ebm-papst Mulfingen GmbH & Co. KG · Bachmühle 2 · D-74673 Mulfingen · Phone +49 (0) 7938 81-0 · Fax +49 (0) 7938 81-110 · info1@de.ebmpapst.com · www.ebmpapst.com

AC axial fan

sickle-shaped blades (S series)

with guard grille for short nozzle

Product drawing

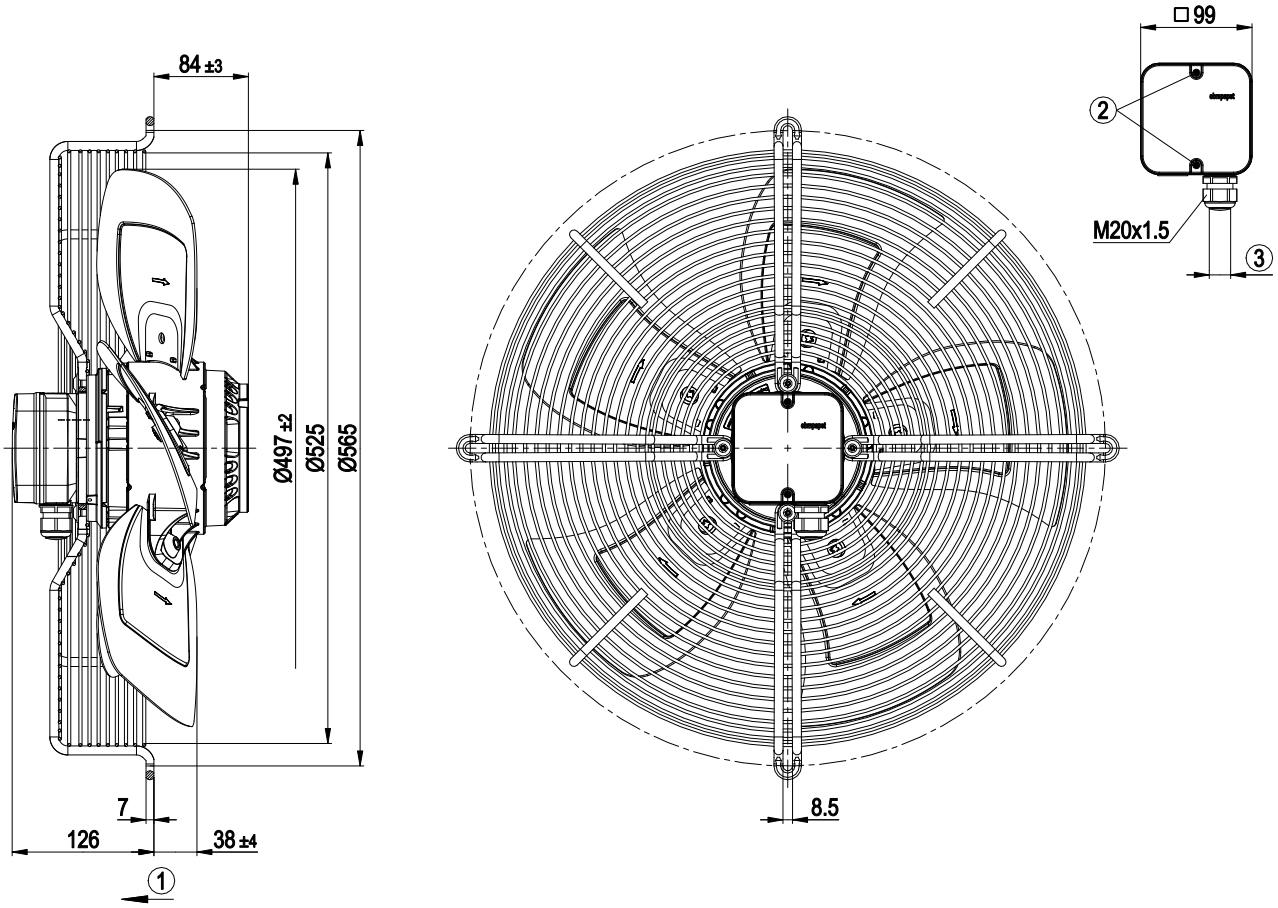

1	Direction of air flow "V"
2	Tightening torque 1.5 ± 0.2 Nm
4	Cable diameter min. 6 mm, max. 12 mm, tightening torque 2 ± 0.3 Nm

ebm-papst Mulfingen GmbH & Co. KG · Bachmühle 2 · D-74673 Mulfingen · Phone +49 (0) 7938 81-0 · Fax +49 (0) 7938 81-110 · info1@de.ebmpapst.com · www.ebmpapst.com

AC axial fan

sickle-shaped blades (S series)

with guard grille for short nozzle

Connection diagram

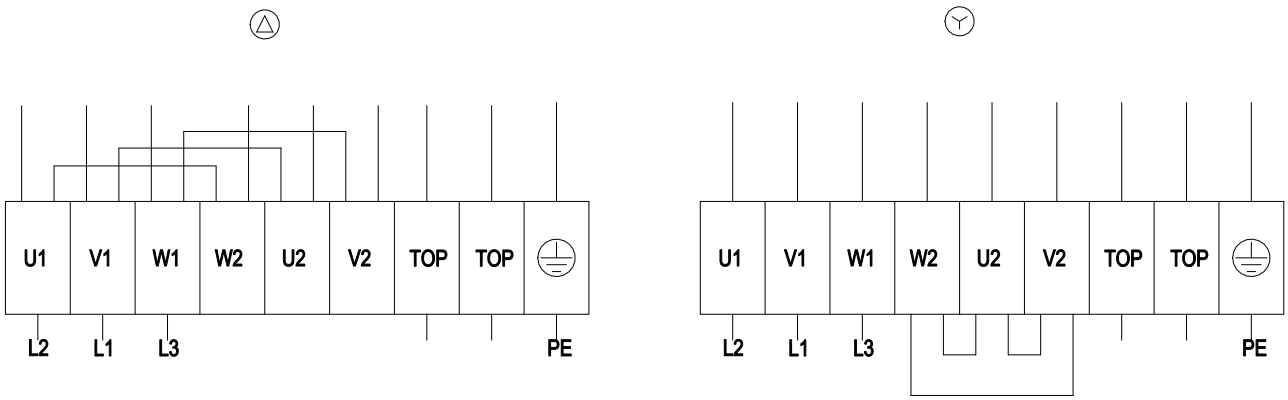

Δ	Delta connection	Y	Star connection	L1	= V1 = blue
L2	= U1 = black	L3	= W1 = brown	W2	yellow
U2	green	V2	white	TOP	2x gray
PE	green/yellow				

ebm-papst Mulfingen GmbH & Co. KG · Bachmühle 2 · D-74673 Mulfingen · Phone +49 (0) 7938 81-0 · Fax +49 (0) 7938 81-110 · info1@de.ebmpapst.com · www.ebmpapst.com

AC axial fan

sickle-shaped blades (S series)

with guard grille for short nozzle

Curves: Air performance 50 Hz

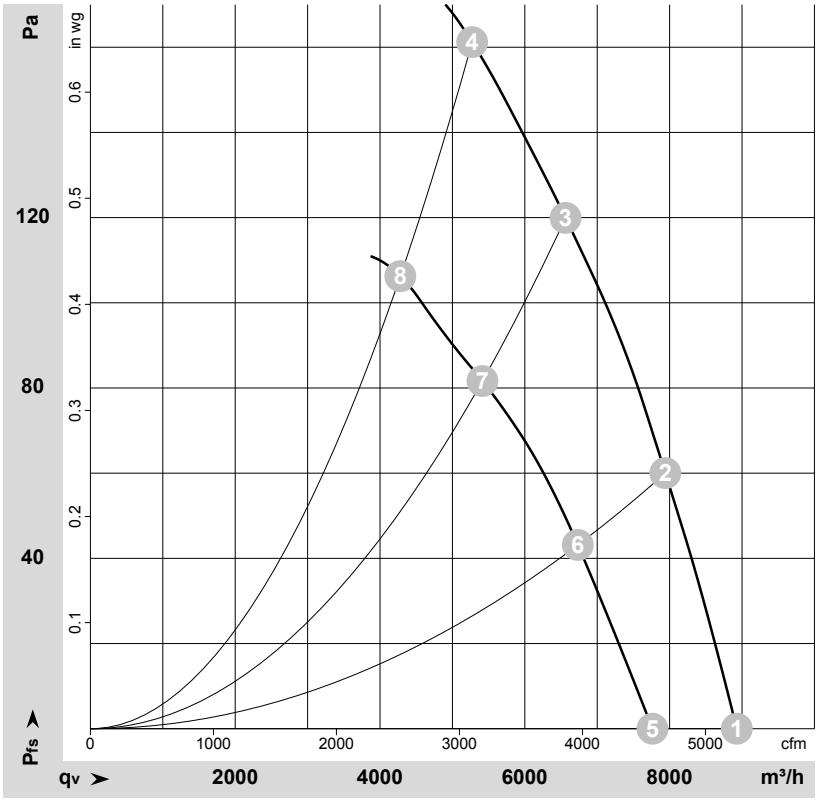

ρ = 1.15 kg/m³ ± 2 %

Measurement: LU-70503-1
Measurement: LU-70507-1

Air performance measured according to ISO 5801 installation category A. For detailed information on the measurement setup, contact ebm-papst. Intake sound level: Sound power level according to ISO 13347 / sound pressure level measured at 1 m distance from fan axis. The values given are valid under the specified measuring conditions and may vary due to conditions of installation. For deviations from the standard configuration, the parameters have to be checked on the installed unit.

Measured values

	Wired	U	f	n	P_e	I	q_V	p_{fs}	q_V	p_{fs}
		V	Hz	min^{-1}	W	A	m^3/h	Pa	cfm	in. wg
1	Δ	400	50	1405	512	1.21	8930	0	5255	0.00
2	Δ	400	50	1385	589	1.29	7940	60	4675	0.24
3	Δ	400	50	1370	648	1.34	6565	120	3865	0.48
4	Δ	400	50	1360	690	1.43	5275	160	3105	0.64
5	Y	400	50	1215	395	0.67	7765	0	4570	0.00
6	Y	400	50	1170	435	0.73	6730	43	3960	0.17
7	Y	400	50	1135	466	0.79	5415	82	3185	0.33
8	Y	400	50	1110	490	0.86	4280	107	2520	0.43

Wired = Wiring · U = Voltage · f = Frequency · n = Speed (rpm) · P_e = Power consumption · I = Current draw · q_V = Air flow · p_{fs} = Pressure increase

ebm-papst Mulfingen GmbH & Co. KG · Bachmühle 2 · D-74673 Mulfingen · Phone +49 (0) 7938 81-0 · Fax +49 (0) 7938 81-110 · info1@de.ebmpapst.com · www.ebmpapst.com

AC axial fan

sickle-shaped blades (S series)

with guard grille for short nozzle

Curves: Air performance 60 Hz

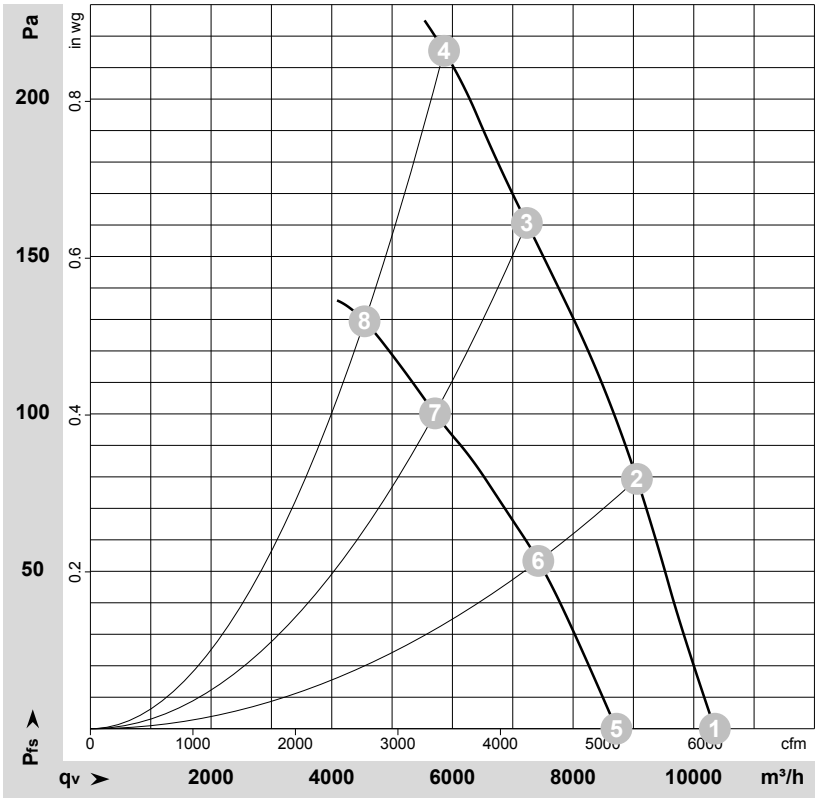

ρ = 1.15 kg/m³ ± 2 %

Measurement: LU-100859-1
Measurement: LU-100861-1

Air performance measured according to ISO 5801 installation category A. For detailed information on the measurement setup, contact ebm-papst. Intake sound level: Sound power level according to ISO 13347 / sound pressure level measured at 1 m distance from fan axis. The values given are valid under the specified measuring conditions and may vary due to conditions of installation. For deviations from the standard configuration, the parameters have to be checked on the installed unit.

Measured values

	Wired	U	f	n	P_e	I	q_V	p_{fs}	q_V	p_{fs}
		V	Hz	min^{-1}	W	A	m^3/h	Pa	cfm	in. wg
1	Δ	480	60	1665	788	1.32	10350	0	6090	0.00
2	Δ	480	60	1645	911	1.44	9060	80	5330	0.32
3	Δ	480	60	1615	1018	1.56	7235	160	4255	0.64
4	Δ	480	60	1600	1100	1.72	5860	215	3450	0.86
5	Y	480	60	1405	601	0.84	8720	0	5130	0.00
6	Y	480	60	1335	663	0.93	7425	54	4370	0.22
7	Y	480	60	1280	707	0.99	5710	100	3360	0.40
8	Y	480	60	1240	740	1.08	4545	130	2675	0.52

Wired = Wiring · U = Voltage · f = Frequency · n = Speed (rpm) · P_e = Power consumption · I = Current draw · q_V = Air flow · p_{fs} = Pressure increase

ebm-papst Mulfingen GmbH & Co. KG · Bachmühle 2 · D-74673 Mulfingen · Phone +49 (0) 7938 81-0 · Fax +49 (0) 7938 81-110 · info1@de.ebmpapst.com · www.ebmpapst.com