S4E350-AN02-51

AC axial fan - HyBlade®

sickled blades (S series)

with guard grille for short nozzle

ebm-papst Mulfingen GmbH & Co. KG
Bachmühle 2 · D-74673 Mulfingen
Phone +49 7938 81-0
Fax +49 7938 81-110
info1@de.ebmpapst.com
www.ebmpapst.com

Limited partnership · Headquarters Mulfingen
County court Stuttgart · HRA 590344

General partner: Elektrobau Mulfingen GmbH · Headquarters Mulfingen
County court Stuttgart · HRB 590142

ErP2015 EXCEEDS THE NORM

Nominal data

Type	**S4E350-AN02-51**
Motor	**M4E074-DF**

Phase		1~
Nominal voltage	VAC	230
Frequency	Hz	50
Type of data definition		ml
Valid for approval / standard		CE
Speed	min^{-1}	1340
Power input	W	165
Current draw	A	0.73
Motor capacitor	µF	4
Capacitor voltage	VDB	400
Capacitor standard		P0 (CE)
Max. back pressure	Pa	90
Min. ambient temperature	°C	-25
Max. ambient temperature	°C	65

ml = max. load · me = max. efficiency · fa = running at free air · cs = customer specs · cu = customer unit
Subject to alterations

Data according to ErP directive

Installation category	A
Efficiency category	Static
Closed-loop speed control	No
Specific ratio*	1,00

* Specific ratio = 1 + p_{sf} / 100 000

		Actual	Request 2013	Request 2015
Overall efficiency η_e		29	24,6	28,6
Efficiency grade N		40,4	36	40
Power input P_e	kW	0,16		
Air flow q_v	m^3/h	2160		
Pressure increase Total p_{sf}	Pa	75		
Speed n	min^{-1}	1355		

Data established at point of optimum efficiency

AC axial fan - HyBlade®

sickled blades (S series)

with guard grille for short nozzle

Technical features

Mass	4.9 kg
Size	350 mm
Surface of rotor	Coated in black
Material of terminal box	ABS plastic, black
Material of blades	PP-GF40 plastic
Material of guard grille	Steel, phosphated and coated in black plastic
Number of blades	5
Direction of air flow	"A"
Direction of rotation	Clockwise, seen on rotor
Type of protection	IP 44; Depending on installation and position as per EN 60034-5
Insulation class	"F"
Humidity class	F1-2
Max. permissible ambient motor temp. (transp./ storage)	+ 80 °C
Min. permissible ambient motor temp. (transp./storage)	- 40 °C
Mounting position	Shaft horizontal or rotor on bottom; rotor on top on request
Condensate discharge holes	Rotor-side
Operation mode	S1
Motor bearing	Ball bearing
Leakage current	< 0.75 mA
Electrical leads	Via terminal box, integrated capacitor connected via terminal box
Motor protection	Thermal overload protector (TOP) wired internally
Cable exit	Axial
Protection class	I (if protective earth is connected by customer)
Product conforming to standard	EN 60335-1; CE

ebm-papst Mulfingen GmbH & Co. KG · Bachmühle 2 · D-74673 Mulfingen · Phone +49 7938 81-0 · Fax +49 7938 81-110 · info1@de.ebmpapst.com · www.ebmpapst.com

AC axial fan - HyBlade®

sickled blades (S series)

with guard grille for short nozzle

Product drawing

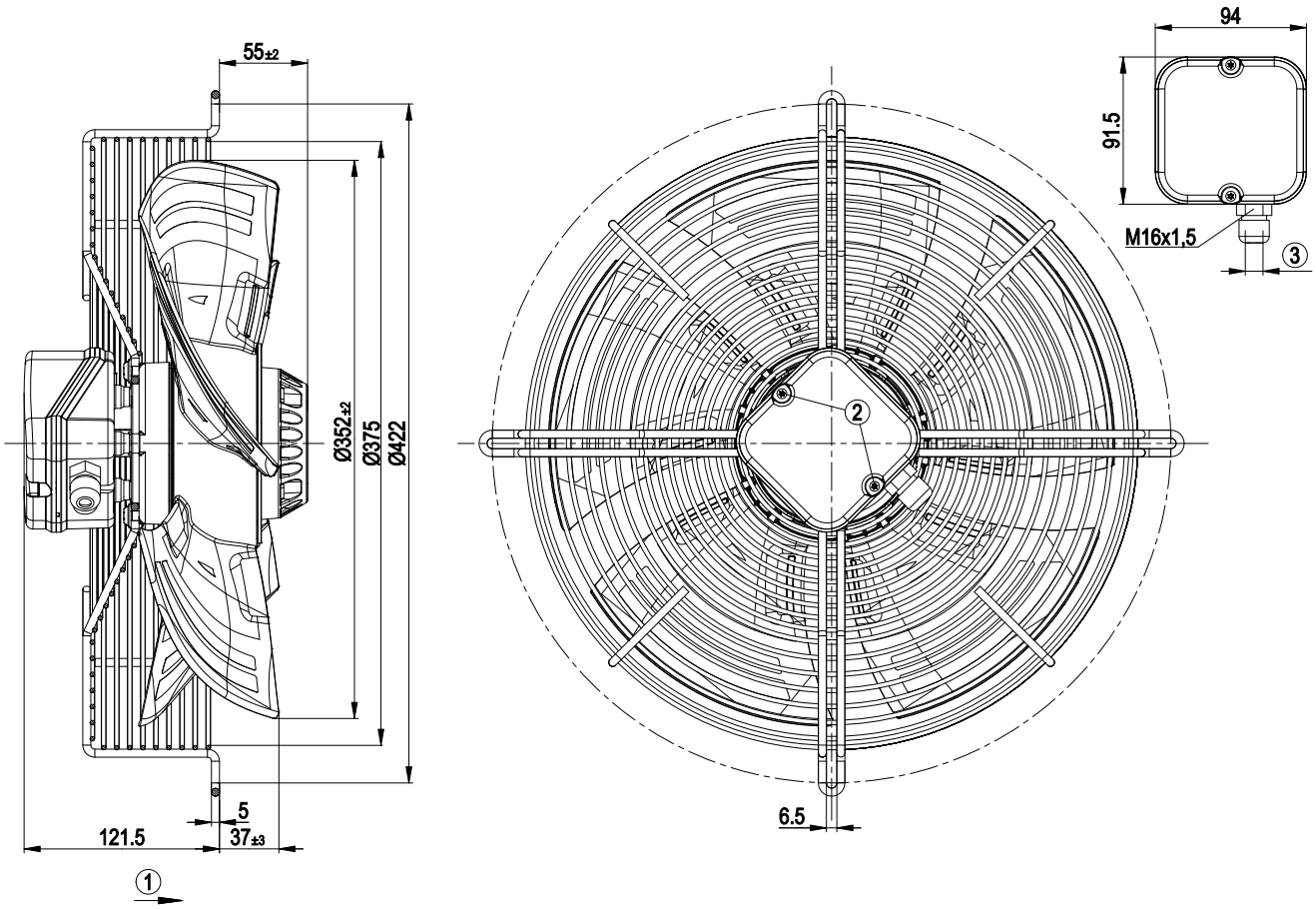

1	Direction of air flow "A"
2	Tightening torque 0.5±0.1 Nm
3	Cable diameter: max. 7.5 mm; tightening torque 1.3 ± 0.2 Nm

Connection screen

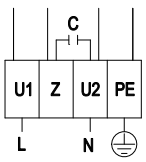

L	= U1 = blue	Z	brown	N	= U2 = black
PE	green/yellow				

ebm-papst Mulfingen GmbH & Co. KG · Bachmühle 2 · D-74673 Mulfingen · Phone +49 7938 81-0 · Fax +49 7938 81-110 · info1@de.ebmpapst.com · www.ebmpapst.com

AC axial fan - HyBlade®

sickled blades (S series)

with guard grille for short nozzle

Charts: Air flow 50 Hz

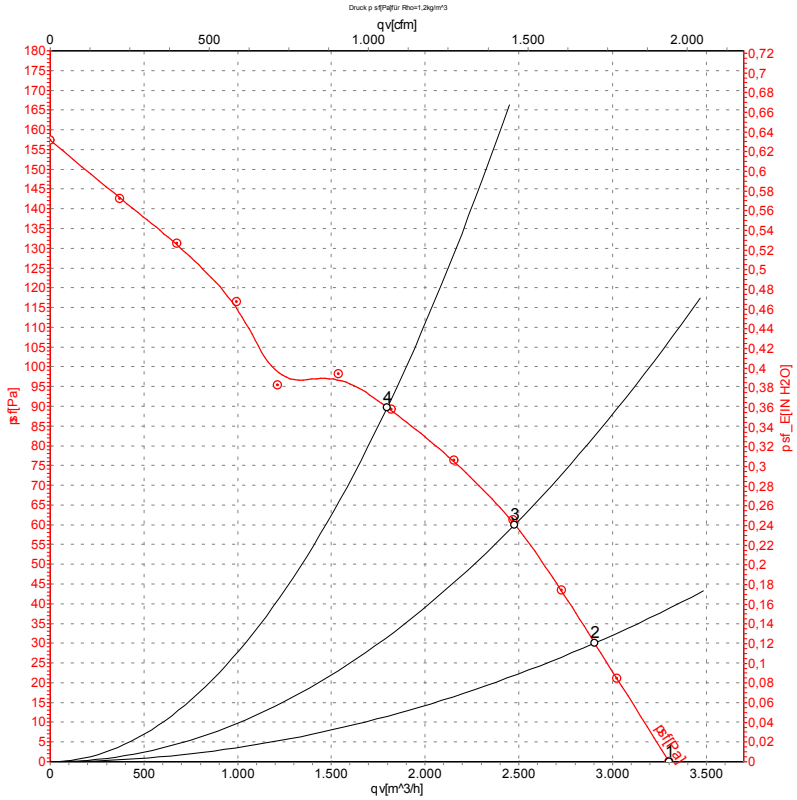

Measurement: LU-131320

Air performance measured as per ISO 5801 Installation category A. For detailed information on the measuring set-up, please contact ebm-papst. Suction-side noise levels: LwA measured as per ISO 13347 / LpA measured with 1m distance to fan axis. The values given are valid under the measuring conditions mentioned above and may vary according to the actual installation situation. With any deviation from the standard set-up, the specific values have to be checked and reviewed with the unit installed.

Measured values

	U	f	n	P_e	I	LpA_{in}	LwA_{in}	qv	p_{sf}
	V	Hz	min^{-1}	W	A	dB(A)	dB(A)	m^3/h	Pa
1	230	50	1400	135	0.60	62	69	3305	0
2	230	50	1380	145	0.64	59	66	2905	30
3	230	50	1365	155	0.68	56	64	2480	60
4	230	50	1340	165	0.73	56	64	1800	90

ebm-papst Mulfingen GmbH & Co. KG · Bachmühle 2 · D-74673 Mulfingen · Phone +49 7938 81-0 · Fax +49 7938 81-110 · info1@de.ebmpapst.com · www.ebmpapst.com