S4E450-AP01-06

AC axial fan

sickled blades (S series)

with guard grille for short nozzle

ebm-papst Mulfingen GmbH & Co. KG
Bachmühle 2
74673 Mulfingen
Phone: +49 7938 81-0
Fax: +49 7938 81-110
www.ebmpapst.com
info1@de.ebmpapst.com

Nominal data

Type	**S4E450-AP01-06**		
Motor	**M4E074-GA**		
Phase		1~	1~
Nominal voltage	[V]	230	230
Frequency	[Hz]	50	60
Type of data definition		rfa	rfa
Valid for approval / standard		CE	CE
Speed	[min^{-1}]	1400	1600
Power input	[W]	245	355
Current draw	[A]	1.1	1.55
Motor capacitor	[µF]	8	8
Capacitor voltage	[VDB]	400	400
Max. back pressure	[Pa]	85	35
Max. ambient temperature	[°C]	60	40

ml = max. load · me = max. efficiency · rfa = running at free air · cs = customer specs · cu = customer unit
Subject to alterations

AC axial fan

sickled blades (S series)

with guard grille for short nozzle

Technical features

Leackage current	< 0,75 mA
Size	450 mm
Operation mode	S1
Direction of rotation	Counter-clockwise, seen on rotor
Mounting position	Shaft horizontal or rotor on bottom; rotor on top on request
Electrical leads	Via terminal box, integrated capacitor connected via terminal box
Humidity class	F2-2
Direction of air flow	"V"
Insulation class	"F"
Cable exit	Variable
Condensate discharge holes	Rotor-side
Bearing motor	Ball bearing
Mass	7.2 kg
Material of terminal box	ABS Plastic, black
Material of blades	Sheet steel, coated in black
Material of guard grille	Steel, phosphated and coated with black plastic
Motor protection	Thermal overload protector (TOP) wired internally
Product conforming to standard	CE; EN 60335-1
Surface of rotor	Coated in black
Number of blades	5
Type of protection	IP 44 - depending on position
Protection class	I
Max. permissible ambient motor temp. (transp./ storage)	+80 °C
Min. permissible ambient motor temp. (transp./storage)	-40 °C

ebm-papst Mulfingen GmbH & Co. KG · Bachmühle 2 · 74673 Mulfingen · Phone: +49 7938 81-0 · Fax: +49 7938 81-110 · www.ebmpapst.com · info1@de.ebmpapst.com

AC axial fan

sickled blades (S series)

with guard grille for short nozzle

Product drawing

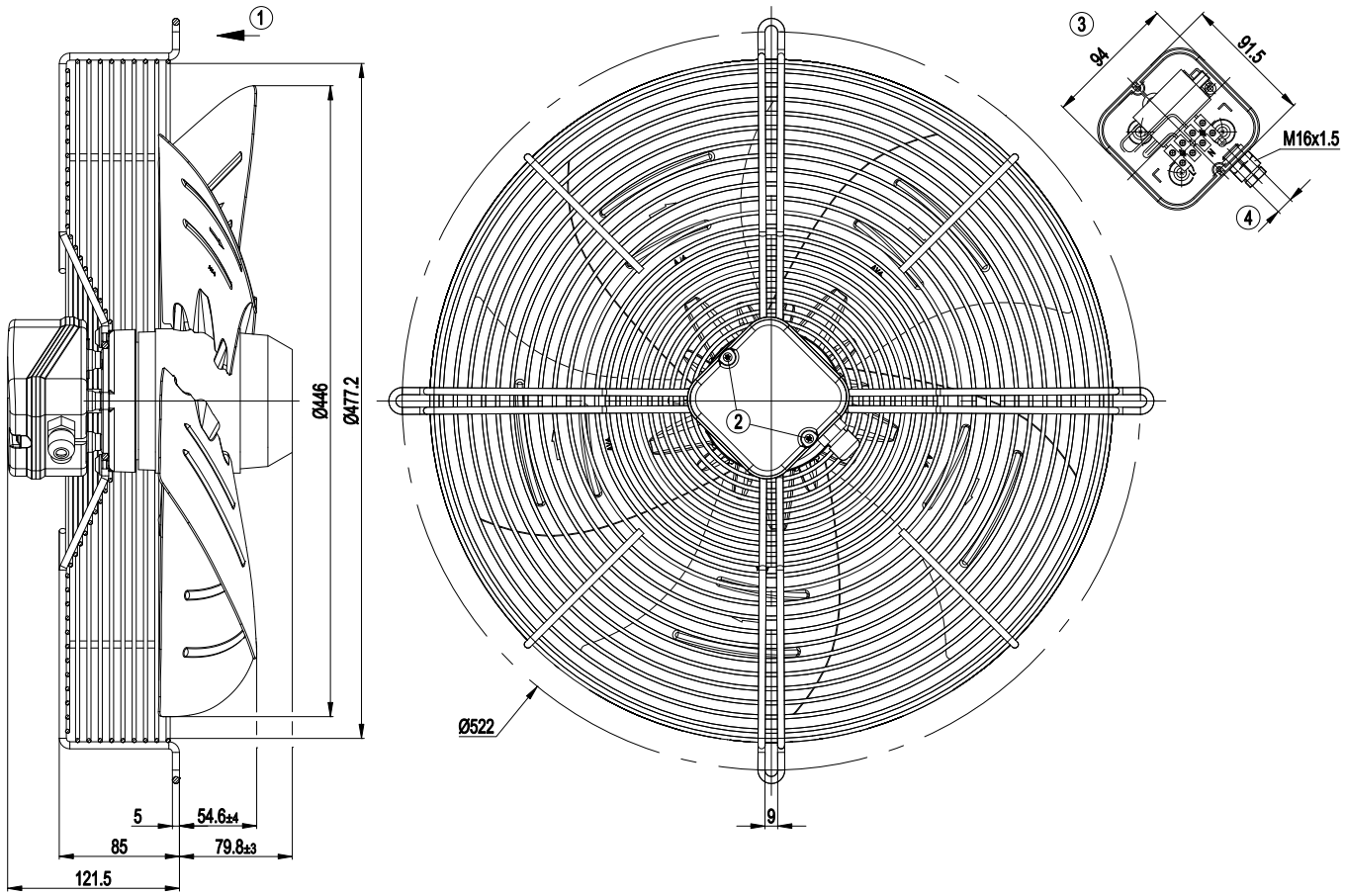

1	Direction of air flow "V"
2	Tightening torque 0.5 Nm
3	Illustration without terminal box cover
4	Cable diameter max. 7.5 mm, tightening torque 2 Nm

ebm-papst Mulfingen GmbH & Co. KG · Bachmühle 2 · 74673 Mulfingen · Phone: +49 7938 81-0 · Fax: +49 7938 81-110 · www.ebmpapst.com · info1@de.ebmpapst.com

AC axial fan

sickled blades (S series)

with guard grille for short nozzle

Connection screen

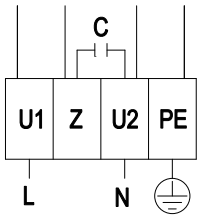

L	= U1 = blue	Z	brown	N	= U2 = black
PE	green/yellow				

ebm-papst Mulfingen GmbH & Co. KG · Bachmühle 2 · 74673 Mulfingen · Phone: +49 7938 81-0 · Fax: +49 7938 81-110 · www.ebmpapst.com · info1@de.ebmpapst.com

S4E450-AP01-06

AC axial fan

sickled blades (S series)

with guard grille for short nozzle

Charts: Air flow 50 Hz

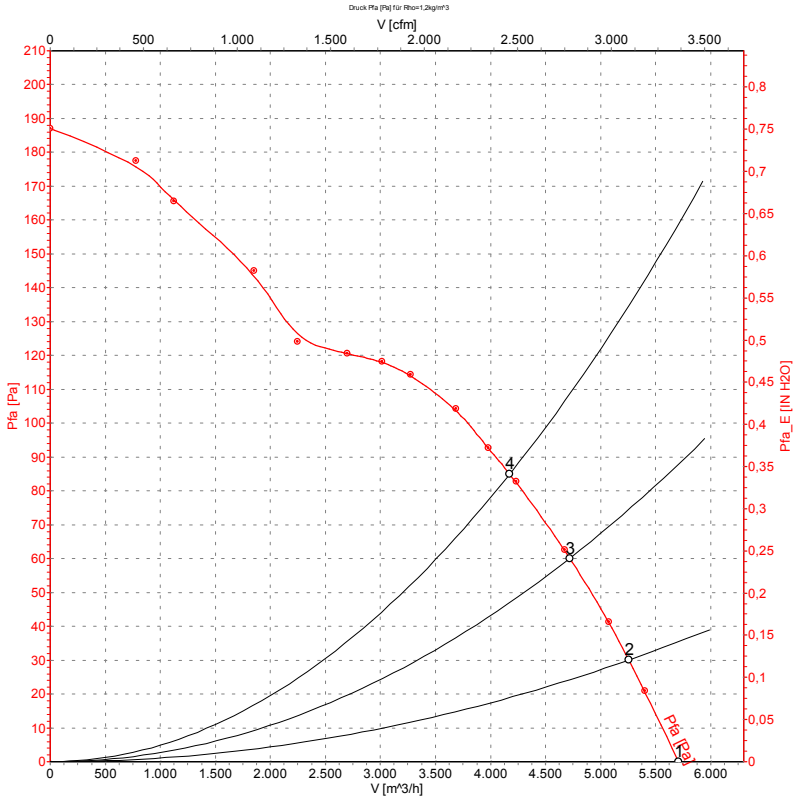

Measurement: LU-33262

Measured values

	U	f	n	P_1	I	$\dot{V}$	p_{fa}
	[V]	[Hz]	[min^{-1}]	[W]	[A]	[m^3/h]	[Pa]
1	230	50	1400	245	1.10	5705	0
2	230	50	1385	264	1.19	5255	30
3	230	50	1365	285	1.27	4720	60
4	230	50	1345	303	1.35	4175	85

ebm-papst Mulfingen GmbH & Co. KG · Bachmühle 2 · 74673 Mulfingen · Phone: +49 7938 81-0 · Fax: +49 7938 81-110 · www.ebmpapst.com · info1@de.ebmpapst.com

AC axial fan

sickled blades (S series)

with guard grille for short nozzle

Charts: Air flow 60 Hz

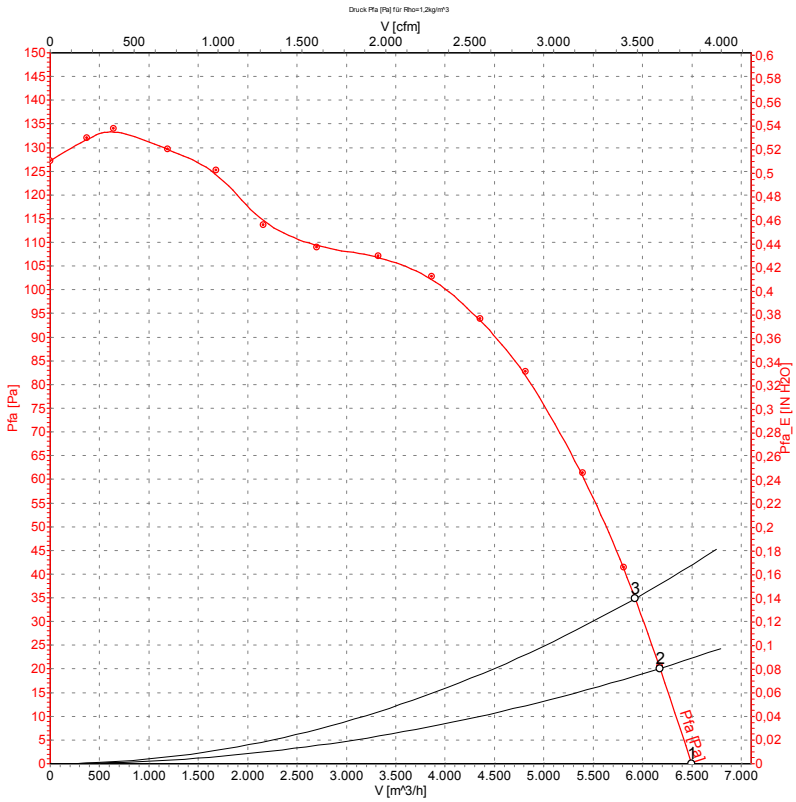

Measurement: LU-33263

Measured values

	U	f	n	P_1	I	$\dot{V}$	p_{fa}
	[V]	[Hz]	[min^{-1}]	[W]	[A]	[m^3/h]	[Pa]
1	230	60	1600	355	1.55	6495	0
2	230	60	1580	364	1.58	6175	20
3	230	60	1560	376	1.63	5925	35

ebm-papst Mulfingen GmbH & Co. KG · Bachmühle 2 · 74673 Mulfingen · Phone: +49 7938 81-0 · Fax: +49 7938 81-110 · www.ebmpapst.com · info1@de.ebmpapst.com