S6E630-AN01-01

AC axial fan - HyBlade®

sickled blades (S series)

with guard grille for short nozzle

ebm-papst Mulfingen GmbH & Co. KG
Bachmühle 2
D-74673 Mulfingen
Phone: +49(0)7938/81-0
Fax: +49(0)7938/81-110
info1@de.ebmpapst.com
www.ebmpapst.com

Nominal data

Type	**S6E630-AN01-01**	
Motor	**M6E110-GF**	
Phase		1~
Nominal voltage	[V]	230
Frequency	[Hz]	50
Type of data definition		ml
Valid for approval / standard		CE
Speed	[min^{-1}]	860
Power input	[W]	600
Current draw	[A]	2.62
Motor capacitor	[µF]	14
Capacitor voltage	[VDB]	400
Max. back pressure	[Pa]	100
Max. ambient temperature	[°C]	55

ml = max. load · me = max. efficiency · rfa = running at free air · cs = customer specs · cu = customer unit
Subject to alterations

AC axial fan - HyBlade®

sickled blades (S series)

with guard grille for short nozzle

Technical features

Leackage current	<= 3.5 mA
Size	630 mm
Operation mode	S1
Direction of rotation	Counter-clockwise, seen on rotor
Mounting position	Shaft horizontal or rotor on bottom; rotor on top on request
Electrical leads	Via terminal box, integrated capacitor connected via terminal box
Humidity class	F4-1
Direction of air flow	"V"
Insulation class	"F"
Cable exit	Axial
Condensate discharge holes	Rotor-side
Bearing motor	Ball bearing
Mass	17.7 kg
Material of terminal box	ABS plastic, black
Material of blades	Press-fitted sheet steel blank, sprayed with PP plastic
Material of guard grille	Steel, phosphated and coated in black plastic
Motor protection	Thermal overload protector (TOP) brought out
Product conforming to standard	CE; EN 61800-5-1
Surface of rotor	Coated in black
Number of blades	5
Type of protection	IP 54
Protection class	I
Max. permissible ambient motor temp. (transp./ storage)	+ 80 °C
Min. permissible ambient motor temp. (transp./storage)	- 40 °C
Approval	CCC; GOST; VDE

ebm-papst Mulfingen GmbH & Co. KG · Bachmühle 2 · D-74673 Mulfingen · Phone: +49(0)7938/81-0 · Fax: +49(0)7938/81-110 · info1@de.ebmpapst.com · www.ebmpapst.com

AC axial fan - HyBlade®

sickled blades (S series)

with guard grille for short nozzle

Product drawing

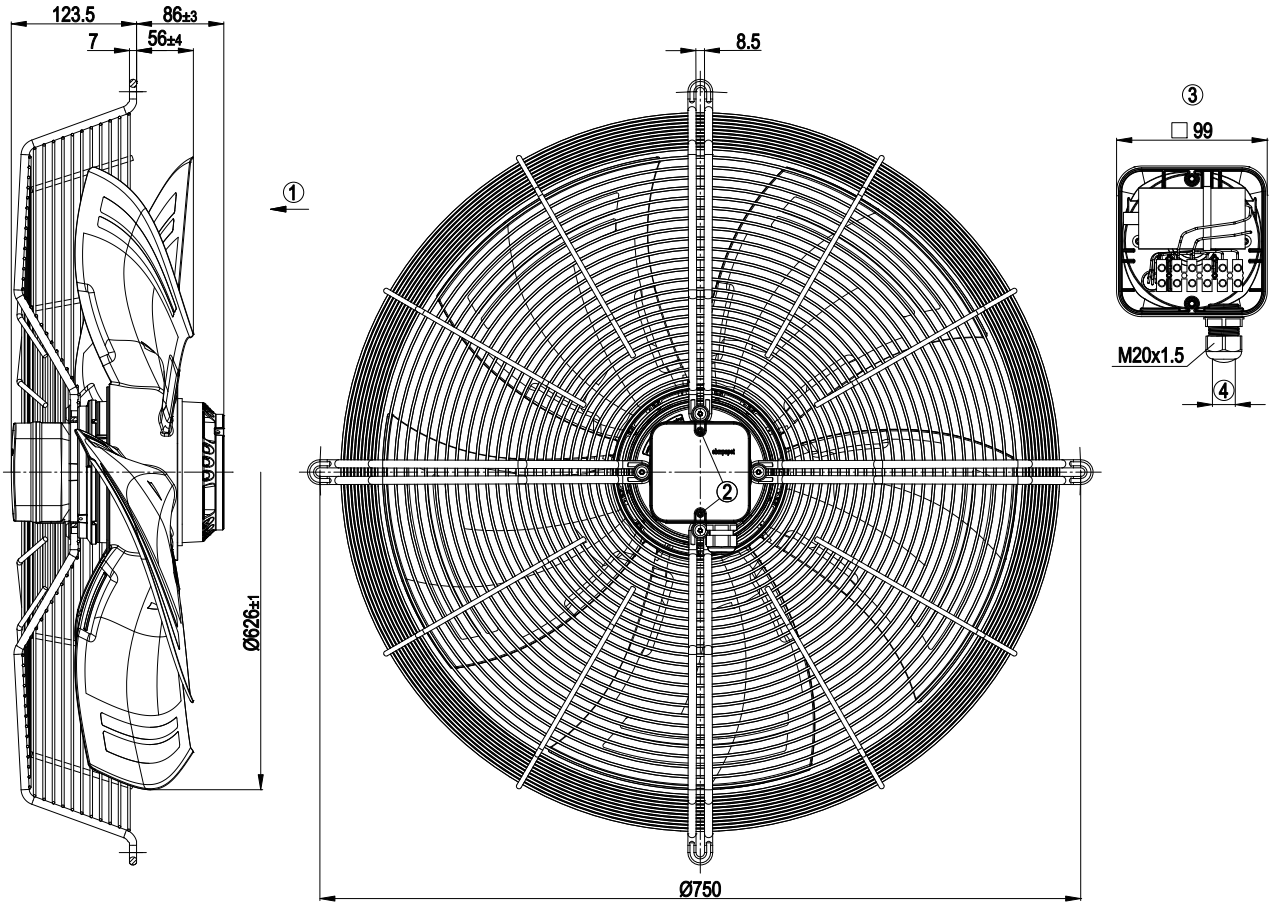

1	Direction of air flow "V"
2	Tightening torque 0.8±0.15 Nm
3	Illustration without terminal box cover
4	Cable diameter: min. 6 mm, max. 12 mm; tightening torque: 2±0.3 Nm

ebm-papst Mulfingen GmbH & Co. KG · Bachmühle 2 · D-74673 Mulfingen · Phone: +49(0)7938/81-0 · Fax: +49(0)7938/81-110 · info1@de.ebmpapst.com · www.ebmpapst.com

AC axial fan - HyBlade®

sickled blades (S series)

with guard grille for short nozzle

Connection screen

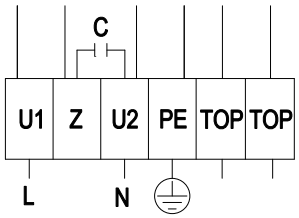

L	= U1 = blue	Z	brown	N	= U2 = black
PE	green / yellow	TOP	grey		

ebm-papst Mulfingen GmbH & Co. KG · Bachmühle 2 · D-74673 Mulfingen · Phone: +49(0)7938/81-0 · Fax: +49(0)7938/81-110 · info1@de.ebmpapst.com · www.ebmpapst.com

AC axial fan - HyBlade®

sickled blades (S series)

with guard grille for short nozzle

Charts: Air flow 50 Hz

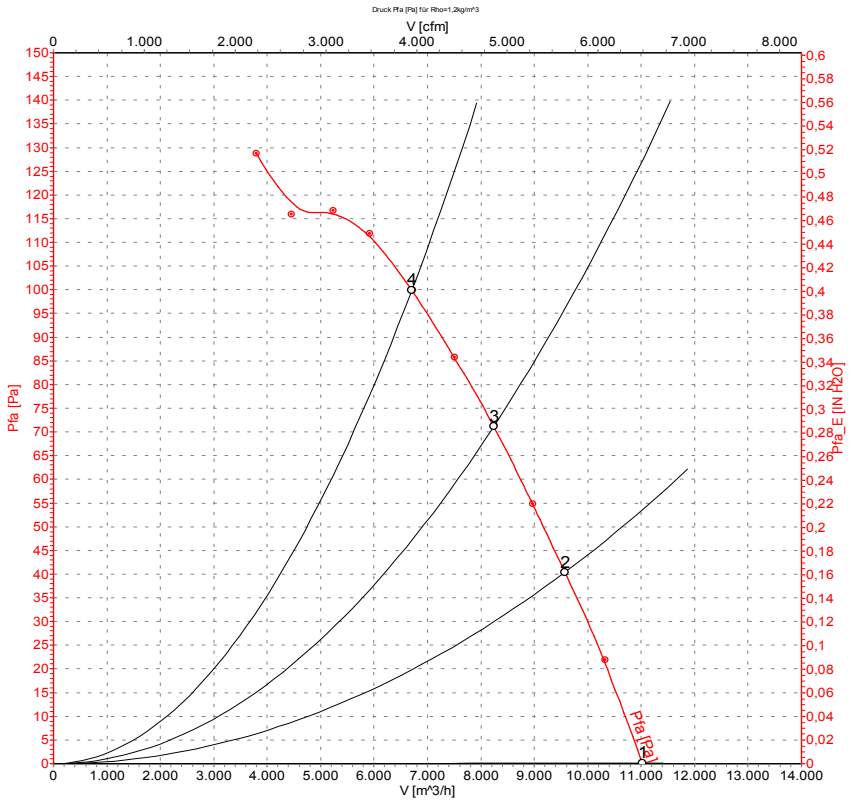

Measurement: LU-105789

Measured values

	U	f	n	P_1	I	LpA_{ss}	LpA_{ds}	LwA_{ss}	LwA_{ds}	$\hat{V}$	p_{fa}
	[V]	[Hz]	[min^{-1}]	[W]	[A]	[dB(A)]	[dB(A)]	[dB(A)]	[dB(A)]	[m^3/h]	[Pa]
1	230	50	925	467	2.04	64	56	70	70	11020	0
2	230	50	905	521	2.27	61	51	67	67	9570	40
3	230	50	885	559	2.44	60	50	66	65	8240	70
4	230	50	860	600	2.62	61	51	68	67	6705	100

ebm-papst Mulfingen GmbH & Co. KG · Bachmühle 2 · D-74673 Mulfingen · Phone: +49(0)7938/81-0 · Fax: +49(0)7938/81-110 · info1@de.ebmpapst.com · www.ebmpapst.com