W2E250-HL06-01

AC axial compact fan

sickled blades (S series)

ebm-papst Mulfingen GmbH & Co. KG
Bachmühle 2
D-74673 Mulfingen
Phone: +49(0)7938/81-0
Fax: +49(0)7938/81-110
info1@de.ebmpapst.com
www.ebmpapst.com

Nominal data

Type	**W2E250-HL06-01**		
Motor	**M2E068-CF**		
Phase		1~	1~
Nominal voltage	[V]	230	230
Frequency	[Hz]	50	60
Type of data definition		rfa	rfa
Valid for approval / standard		CE	CE
Speed	[min^{-1}]	2550	2700
Power input	[W]	127	180
Current draw	[A]	0.56	0.79
Motor capacitor	[µF]	4	4
Capacitor voltage	[VDB]	400	400
Capacitor standard		P0 (CE)	P0 (CE)
Max. back pressure	[Pa]	100	100
Max. ambient temperature	[°C]	60	45

ml = max. load · me = max. efficiency · rfa = running at free air · cs = customer specs · cu = customer unit
Subject to alterations

AC axial compact fan

sickled blades (S series)

Technical features

Leackage current	< 0.75 mA
Size	250 mm
Operation mode	S1
Direction of rotation	Counter-clockwise, seen on rotor
Mounting position	Any
Electrical leads	Via terminal strips, integrated capacitor connected via terminal strips
Humidity class	F0
Direction of air flow	"V"
Insulation class	"F"
Cable exit	Variable
Condensate discharge holes	None
Bearing motor	Ball bearing
Mass	2.8 kg
Material of blades	Sheet steel, coated in black
Material of wall ring	Die-cast aluminium
Motor protection	Thermal overload protector (TOP) wired internally
Product conforming to standard	CE; EN 60335-1
Surface of rotor	Coated in black
Number of blades	7
Type of protection	IP 44
Protection class	I
Max. permissible ambient motor temp. (transp./ storage)	+ 80 °C
Min. permissible ambient motor temp. (transp./storage)	- 40 °C
Approval	CCC; CSA C22.2 Nr.77; GOST; UL 2111

ebm-papst Mulfingen GmbH & Co. KG · Bachmühle 2 · D-74673 Mulfingen · Phone: +49(0)7938/81-0 · Fax: +49(0)7938/81-110 · info1@de.ebmpapst.com · www.ebmpapst.com

AC axial compact fan

sickled blades (S series)

Product drawing

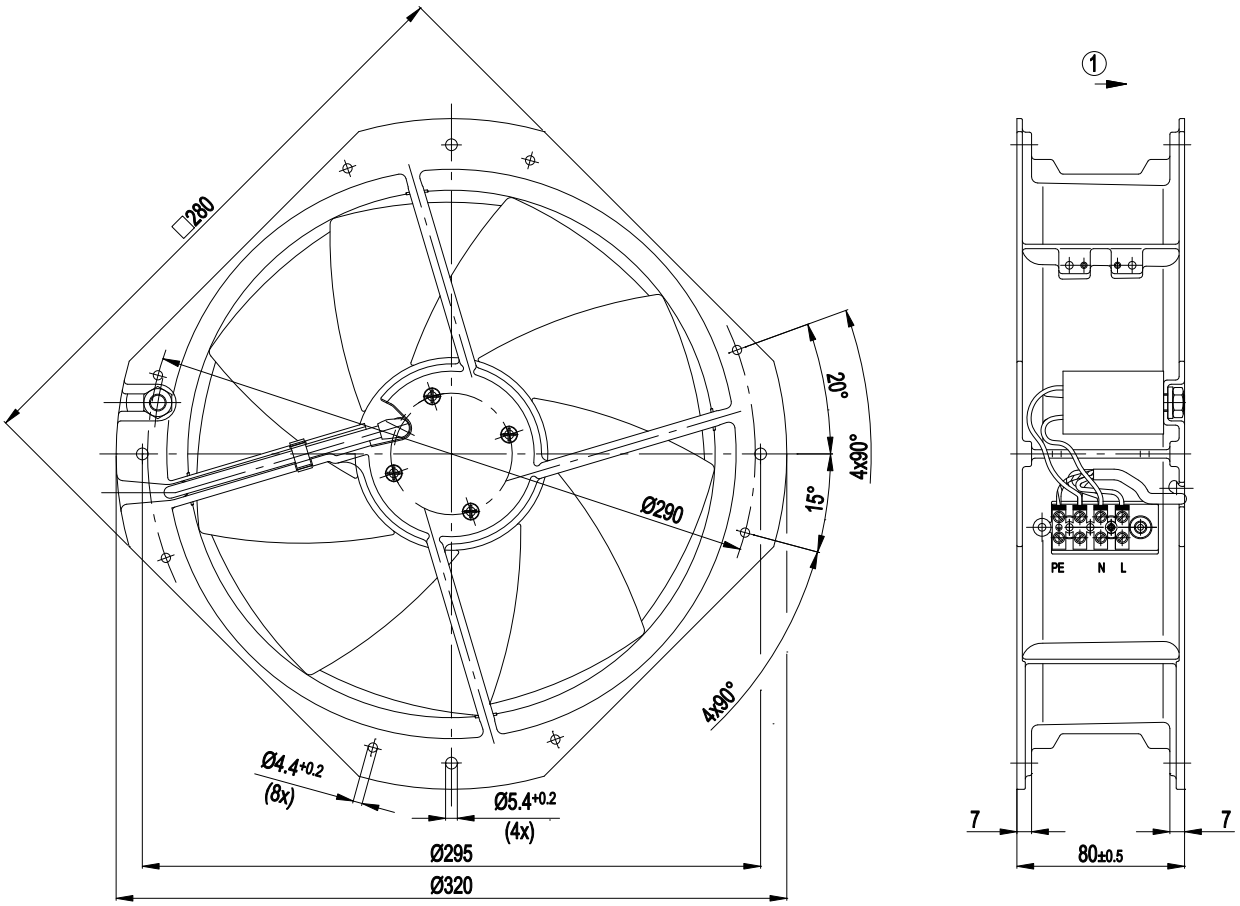

1	Direction of air flow "V"

Connection screen

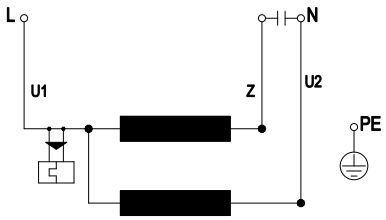

U1	blue	Z	brown	U2	black
PE	green/yellow				

ebm-papst Mulfingen GmbH & Co. KG · Bachmühle 2 · D-74673 Mulfingen · Phone: +49(0)7938/81-0 · Fax: +49(0)7938/81-110 · info1@de.ebmpapst.com · www.ebmpapst.com

AC axial compact fan

sickled blades (S series)

Charts: Air flow 50 Hz

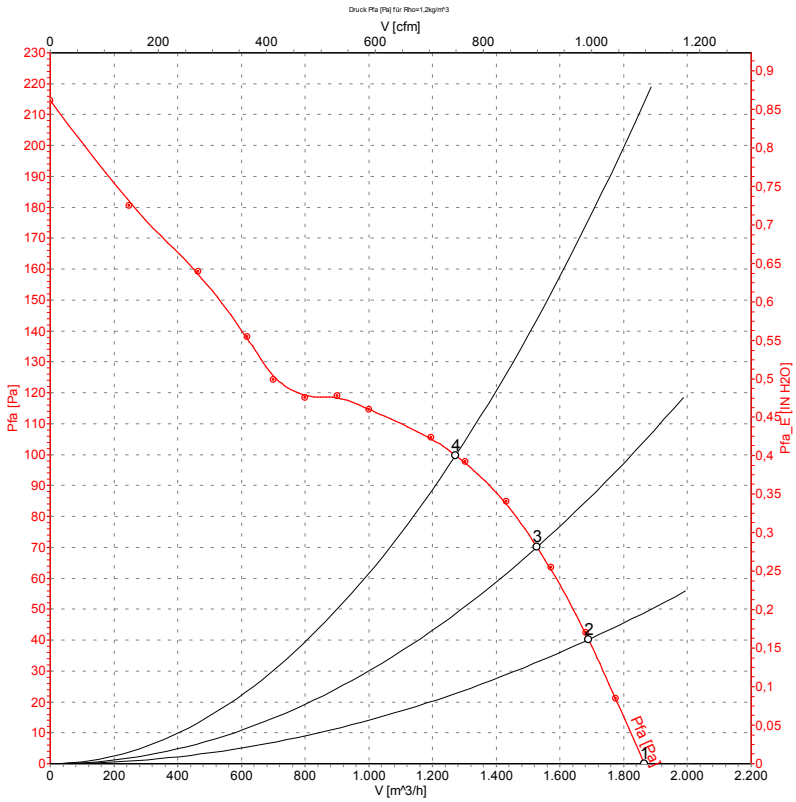

Measurement: LU-59959

Measured values

	U	f	n	P_1	I	$\dot{V}$	p_{fa}
	[V]	[Hz]	[min^{-1}]	[W]	[A]	[m^3/h]	[Pa]
1	230	50	2550	127	0.56	1865	0
2	230	50	2485	136	0.59	1690	40
3	230	50	2440	141	0.61	1530	70
4	230	50	2385	146	0.63	1275	100

ebm-papst Mulfingen GmbH & Co. KG · Bachmühle 2 · D-74673 Mulfingen · Phone: +49(0)7938/81-0 · Fax: +49(0)7938/81-110 · info1@de.ebmpapst.com · www.ebmpapst.com

AC axial compact fan

sickled blades (S series)

Charts: Air flow 60 Hz

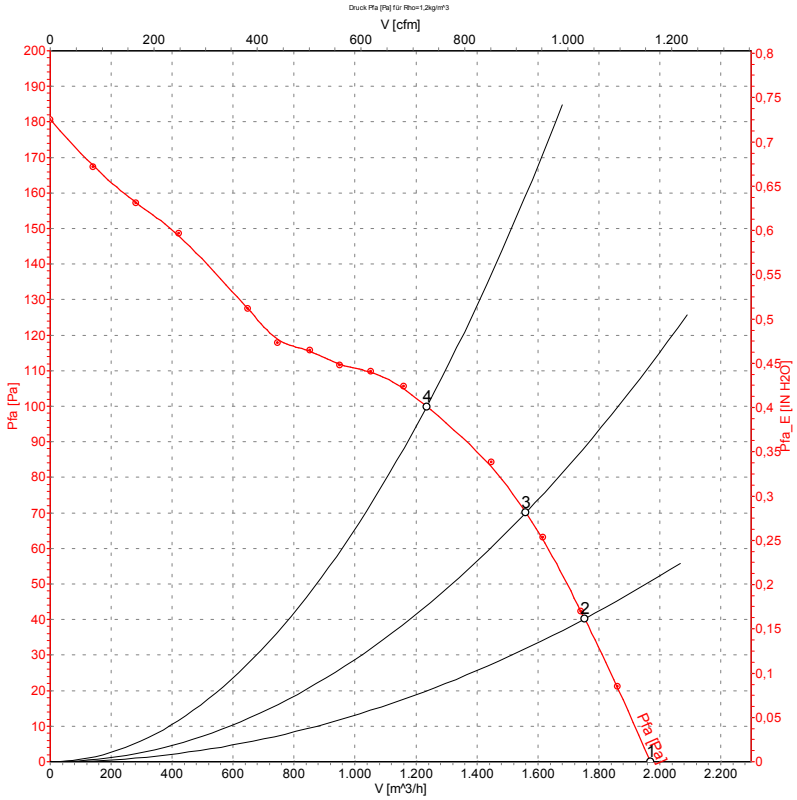

Measurement: LU-59960

Measured values

	U	f	n	P_1	I	$\dot{V}$	p_{fa}
	[V]	[Hz]	[min^{-1}]	[W]	[A]	[m^3/h]	[Pa]
1	230	60	2700	180	0.79	1970	0
2	230	60	2575	186	0.82	1755	40
3	230	60	2485	189	0.83	1560	70
4	230	60	2370	192	0.84	1235	100

ebm-papst Mulfingen GmbH & Co. KG · Bachmühle 2 · D-74673 Mulfingen · Phone: +49(0)7938/81-0 · Fax: +49(0)7938/81-110 · info1@de.ebmpapst.com · www.ebmpapst.com