8317078523
W6D800KG1301

AC axial fan - AxiBlade

sickle-shaped blades (S series)

with square full nozzle

ebm-papst Ventilator (Shanghai) Co.,Ltd.
No.418, Hua Jing Road, Wai Gao Qiao Free Trade Zone, Pudong
Tel:+86(021)-50460183
www.ebmpapst.com

Nominal data

Type	**8317078523 - W6D800KG1301**
Motor	**M6D138-HF**

Phase		3~	3~
Nominal voltage	VAC	400	400
Wiring		Δ	Y
Frequency	Hz	50	50
Method of obtaining data		ml	ml
Valid for approval/standard		CE	CE
Speed (rpm)	min^{-1}	870	650
Power consumption	W	1430	840
Current draw	A	2.8	1.6
Max. back pressure	Pa	155	80
Max. back pressure	in. wg	0.62	0.32
Min. ambient temperature	°C	-40	-40
Max. ambient temperature	°C	60	60
Starting current	A	9	3

ml = Max. load · me = Max. efficiency · fa = Free air · cs = Customer specification · ce = Customer equipment
Subject to change

Data according to Commission Regulation (EU) 327/2011 (EN 17166)

		Actual	Req. 2015
01 Overall efficiency η_{es}	%	40.8	34.4
02 Measurement category		A	
03 Efficiency category		Static	
04 Efficiency grade N		46.4	40
05 Variable speed drive		No	

09 Power consumption P_e	kW	1.31
09 Air flow q_v	m^3/h	14480
09 Pressure increase p_{fs}	Pa	134
10 Speed (rpm) n	min^{-1}	880
11 Specific ratio*		1.00

Data obtained at optimum efficiency level.
The ErP data is determined using a motor-impeller combination in a standardized measurement setup.

* Specific ratio = 1 + p_{fs} / 100 000 Pa

LU-199226

ebmpapst

8317078523
W6D800KG1301

AC axial fan - AxiBlade

sickle-shaped blades (S series)

with square full nozzle

Technical description

Weight	39.4 kg
Size	800 mm
Motor size	138
Rotor surface	Cast in aluminum
Terminal box material	PP plastic
Blade material	PP plastic
Fan housing material	Sheet steel, galvanized and coated with black plastic (RAL 9005)
Guard grille material	Steel, coated with black plastic (RAL 9005)
Number of blades	5
Blade pitch	0°
Airflow direction	V
Direction of rotation	Clockwise, viewed toward rotor
Degree of protection	IP55
Insulation class	"F"
Moisture (F) / Environmental (H) protection class	H2
Ambient temperature note	Occasional start-up at temperatures between -40°C and -25°C is permitted. For continuous operation at ambient temperatures below -25°C (such as refrigeration applications), use must be made of a fan design with special low-temperature bearings.
Max. permitted ambient temp. for motor (transport/storage)	+80 °C
Min. permitted ambient temp. for motor (transport/storage)	-40 °C
Installation position	Any
Condensation drainage holes	On rotor and stator sides
Mode	S1
Motor bearing	Ball bearing
Touch current according to IEC 60990 (measuring circuit Fig. 4, TN system)	<= 3.5 mA
Electrical hookup	Terminal box
Motor protection	Thermal overload protector (TOP) with basic insulation
Protection class	I (with customer connection of protective earth)
Conformity with standards	EN 60034-1 (2010); CE
Approval	VDE; EAC

ebmpapst

AC axial fan - AxiBlade

sickle-shaped blades (S series)

with square full nozzle

Product drawing

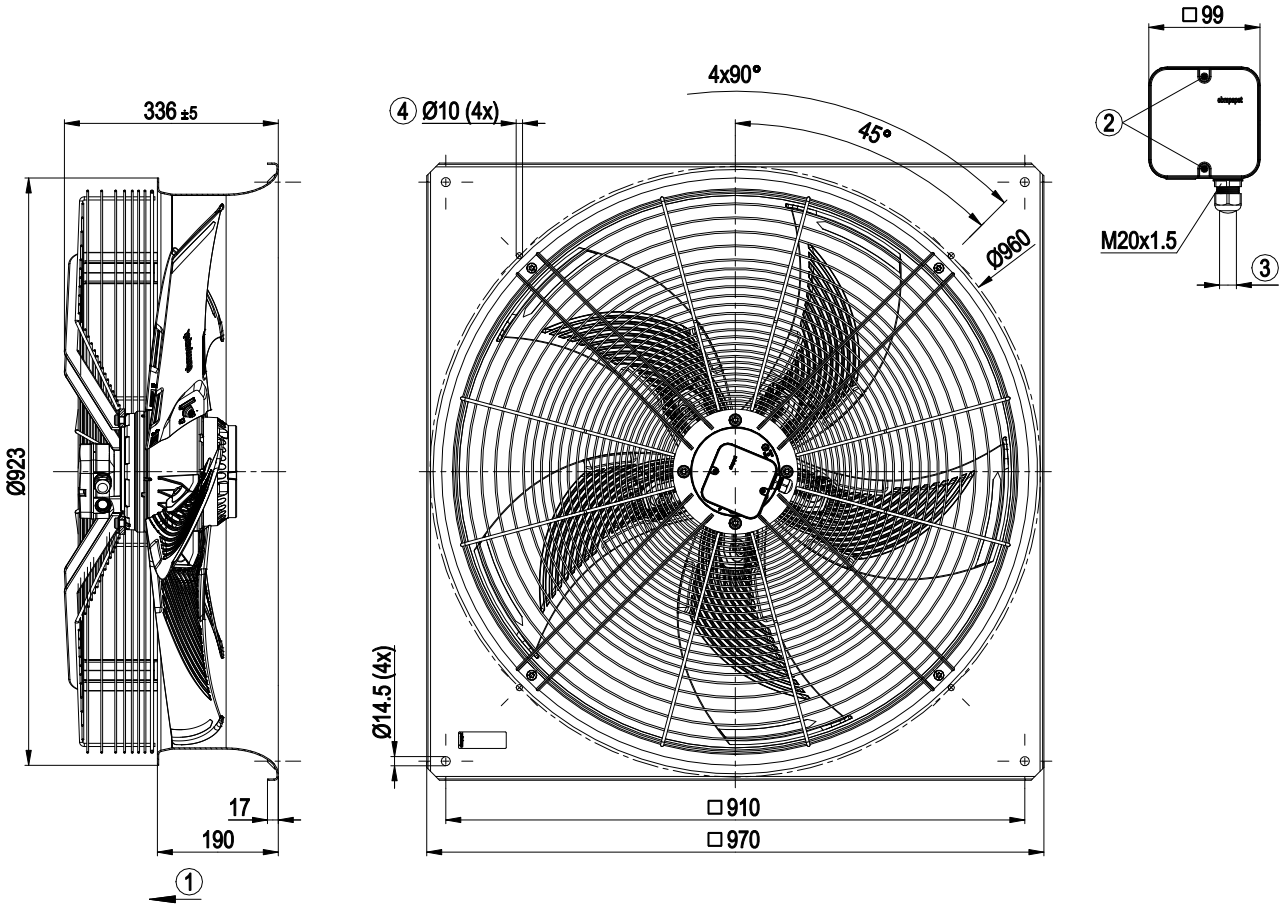

1	Airflow direction "V"
2	Tightening torque 1.5 ± 0.2 Nm
3	Cable diameter min. 7 mm, max. 14 mm, tightening torque 2 ± 0.3 Nm
4	Attachment holes for FlowGrid (80000-2-2957 not included in scope of delivery)

ebmpapst

AC axial fan - AxiBlade

sickle-shaped blades (S series)

with square full nozzle

Connection diagram

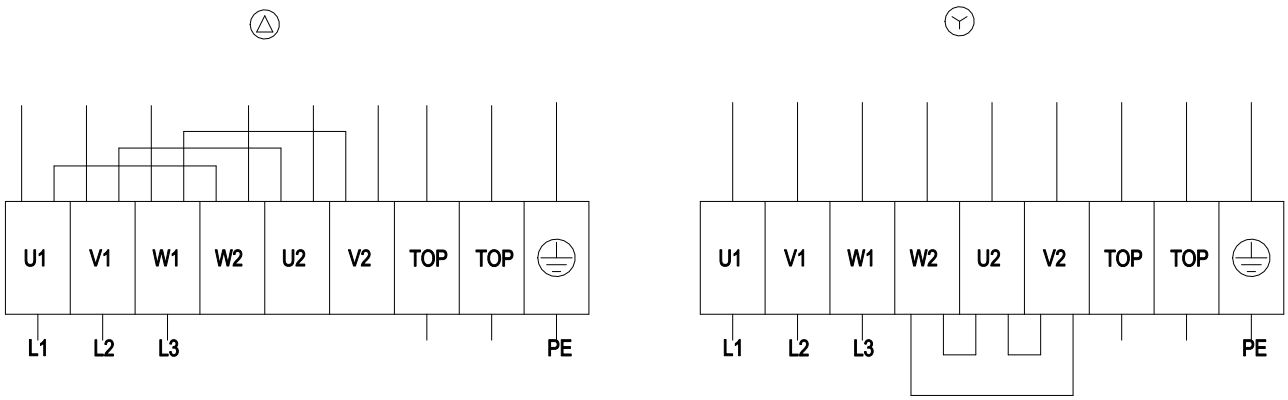

Δ	Delta connection	Y	Star connection	L1	= U1 = black
L2	= V1 = blue	L3	= W1 = brown	W2	yellow
U2	green	V2	white	TOP	2x gray
PE	green/yellow				

ebmpapst

8317078523
W6D800KG1301

AC axial fan - AxiBlade

sickle-shaped blades (S series)

with square full nozzle

Curves: Air performance 50 Hz

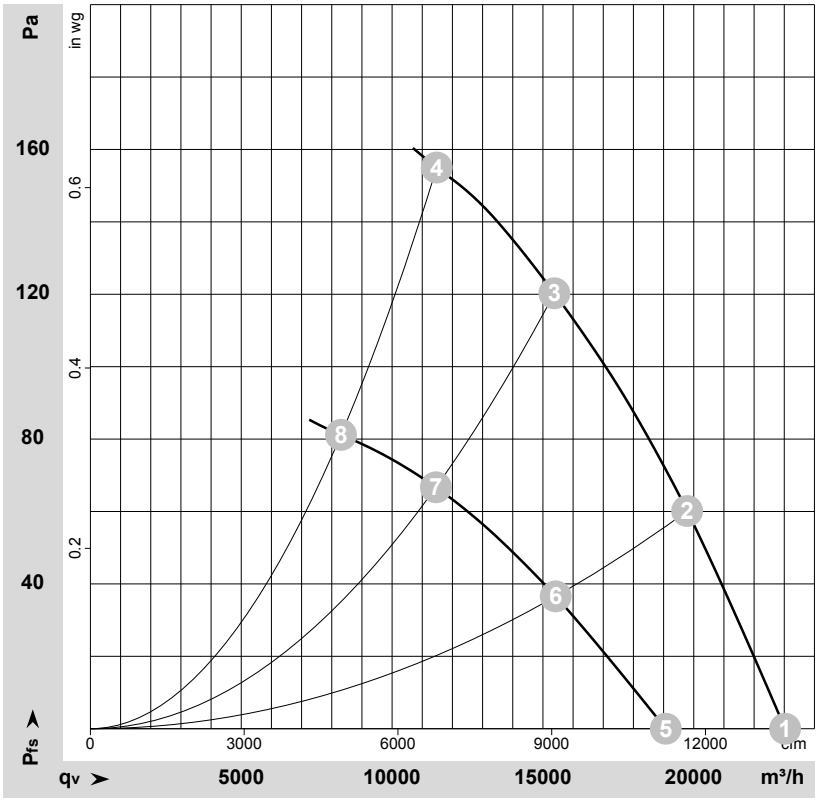

ρ = 1.15 kg/m³ ± 2 %

Measurement: LU-178965-1
Measurement: LU-179021-1

Fan performance

	Wired	U	f	n	P_e	I	q_V	p_{fs}
		V	Hz	min^{-1}	W	A	m^3/h	Pa
1	Δ	400	50	925	962	2.27	23030	0
2	Δ	400	50	900	1163	2.50	19780	60
3	Δ	400	50	880	1334	2.71	15380	120
4	Δ	400	50	870	1430	2.80	11480	155
5	Y	400	50	755	692	1.29	19070	0
6	Y	400	50	700	776	1.47	15425	37
7	Y	400	50	655	830	1.59	11450	67
8	Y	400	50	650	840	1.60	8305	81

ml = Max. load · me = Max. efficiency · fa = Free air · cs = Customer specification · ce = Customer equipment
Subject to change

ebmpapst