K3G280-RR04-I2

EC centrifugal module - RadiCal

backward-curved, single-intake

with support bracket



ebm-papst Mulfingen GmbH & Co. KG
Bachmühle 2 · D-74673 Mulfingen
Phone +49 7938 81-0
Fax +49 7938 81-110
info1@de.ebmpapst.com
www.ebmpapst.com

Limited partnership · Headquarters Mulfingen
Amtsgericht (court of registration) Stuttgart · HRA 590344

General partner Elektrobau Mulfingen GmbH · Headquarters Mulfingen
Amtsgericht (court of registration) Stuttgart · HRB 590142

ErP2015 EXCEEDS THE NORM

Nominal data

Type	**K3G280-RR04-I2**
Motor	**M3G084-DF**

Phase		1~
Nominal voltage	VAC	230
Nominal voltage range	VAC	200 .. 277
Frequency	Hz	50/60
Method of obtaining data		ml
Speed	min^{-1}	2900
Power consumption	W	660
Current draw	A	2.9
Min. ambient temperature	°C	-25
Max. ambient temperature	°C	60

ml = Max. load · me = Max. efficiency · fa = Free air · cs = Customer specification · ce = Customer equipment
Subject to change

Data according to ErP Directive

		Actual	Req. 2015
01 Overall efficiency η_{es}	%	66.3	49.5
02 Measurement category		A	
03 Efficiency category		Static	
04 Efficiency grade N		78.8	62
05 Variable speed drive		Yes	

09 Power consumption P_{ed}	kW	0.65
09 Air flow q_v	m^3/h	2100
09 Pressure increase p_{fs}	Pa	682
10 Speed n	min^{-1}	2905
11 Specific ratio*		1.01

Data obtained at optimum efficiency level.
The ErP data is determined using a motor-impeller combination in a standardized measurement setup.

* Specific ratio = 1 + p_{fs} / 100 000 Pa

LU-151716

EC centrifugal module - RadiCal

backward-curved, single-intake

with support bracket

Technical description

Weight	8.8 kg
Fan size	280 mm
Rotor surface	Painted black
Electronics housing material	Die-cast aluminum
Impeller material	PP plastic
Support plate material	Sheet steel, galvanized
Support bracket material	Steel, painted black
Inlet nozzle material	Sheet steel, galvanized
Number of blades	6
Direction of rotation	Clockwise, viewed toward rotor
Degree of protection	IP55
Insulation class	"F"
Moisture (F) / Environmental (H) protection class	F3-1
Ambient temperature note	Occasional start-up between -40°C and -25°C is permissible. For continuous operation at temperatures below -25°C (e.g. refrigeration applications) we recommend our fan design with special low-temperature bearings.
Max. permitted ambient temp. for motor (transport/storage)	+80 °C
Min. permitted ambient temp. for motor (transport/storage)	-40 °C
Installation position	Shaft horizontal or rotor on bottom; rotor on top on request
Condensation drainage holes	On rotor side
Mode	S1
Motor bearing	Ball bearing
Technical features	- Output 10 VDC, max. 10 mA - Operation and alarm display - Alarm relay - Integrated PID controller - Power limiter - Motor current limitation - PFC, active - RS-485 MODBUS-RTU - Soft start - Control input 0-10 VDC / PWM - Control interface with SELV potential safely disconnected from supply - Thermal overload protection for electronics/motor - Line undervoltage / phase failure detection
EMC immunity to interference	According to EN 61000-6-2 (industrial environment)
EMC circuit feedback	According to EN 61000-3-2/3
EMC interference emission	According to EN 61000-6-3 (household environment)
Touch current according to IEC 60990 (measuring circuit Fig. 4, TN system)	<= 3.5 mA
Motor protection	Thermal overload protector (TOP) internally connected
With cable	Variable
Protection class	I (with customer connection of protective earth)
Conformity with standards	EN 61800-5-1; EN 60335-1; CE
Approval	EAC; CCC; UL 1004-7 + 60730; C22.2 No.77 + CAN/CSA-E60730-1

ebm-papst Mulfingen GmbH & Co. KG · Bachmühle 2 · D-74673 Mulfingen · Phone +49 (0) 7938 81-0 · Fax +49 (0) 7938 81-110 · info1@de.ebmpapst.com · www.ebmpapst.com

EC centrifugal module - RadiCal

backward-curved, single-intake

with support bracket

Product drawing

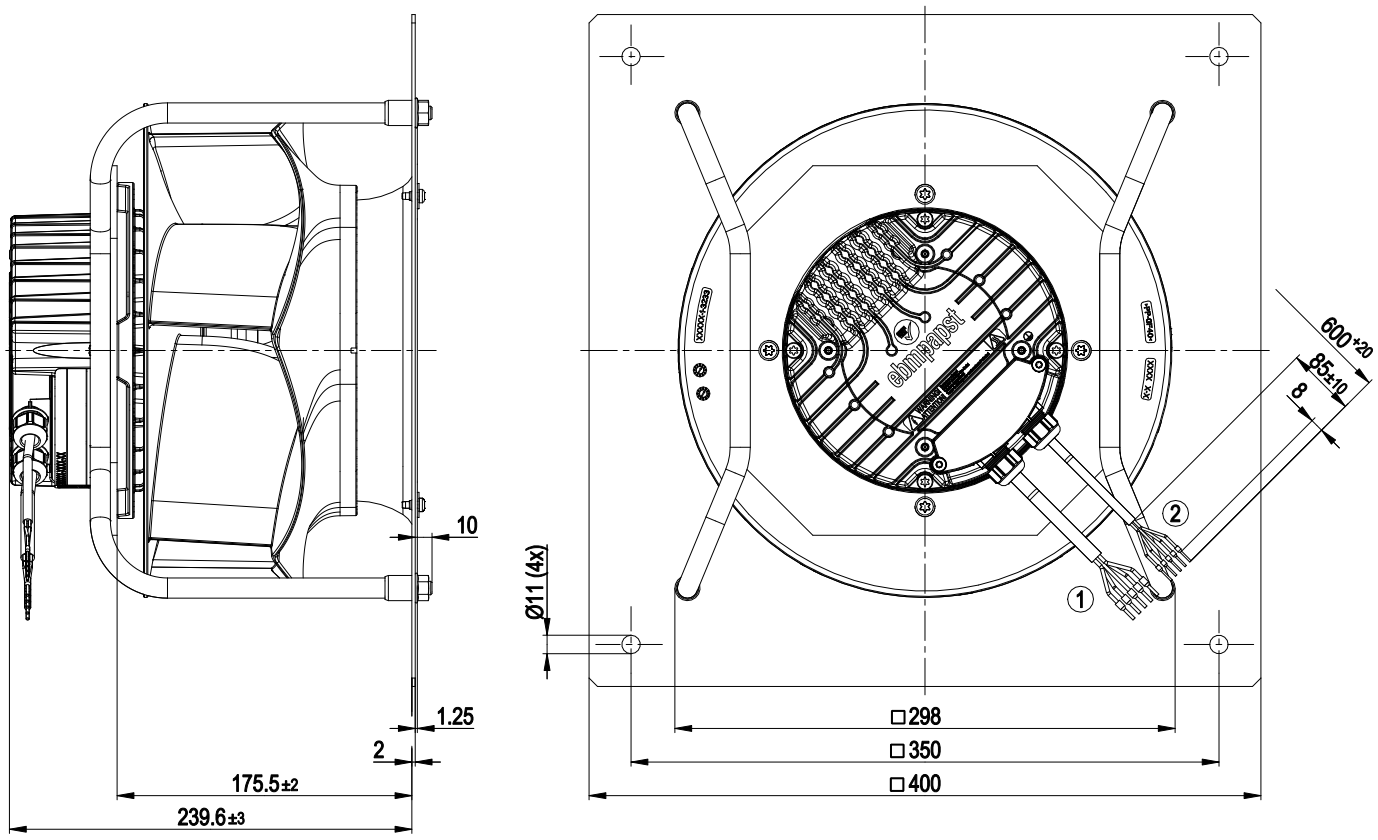

1	Cable PVC AWG18, 5x crimped ferrules
2	Cable PVC AWG22, 5x crimped ferrules

ebm-papst Mulfingen GmbH & Co. KG · Bachmühle 2 · D-74673 Mulfingen · Phone +49 (0) 7938 81-0 · Fax +49 (0) 7938 81-110 · info1@de.ebmpapst.com · www.ebmpapst.com

EC centrifugal module - RadiCal

backward-curved, single-intake

with support bracket

Connection diagram

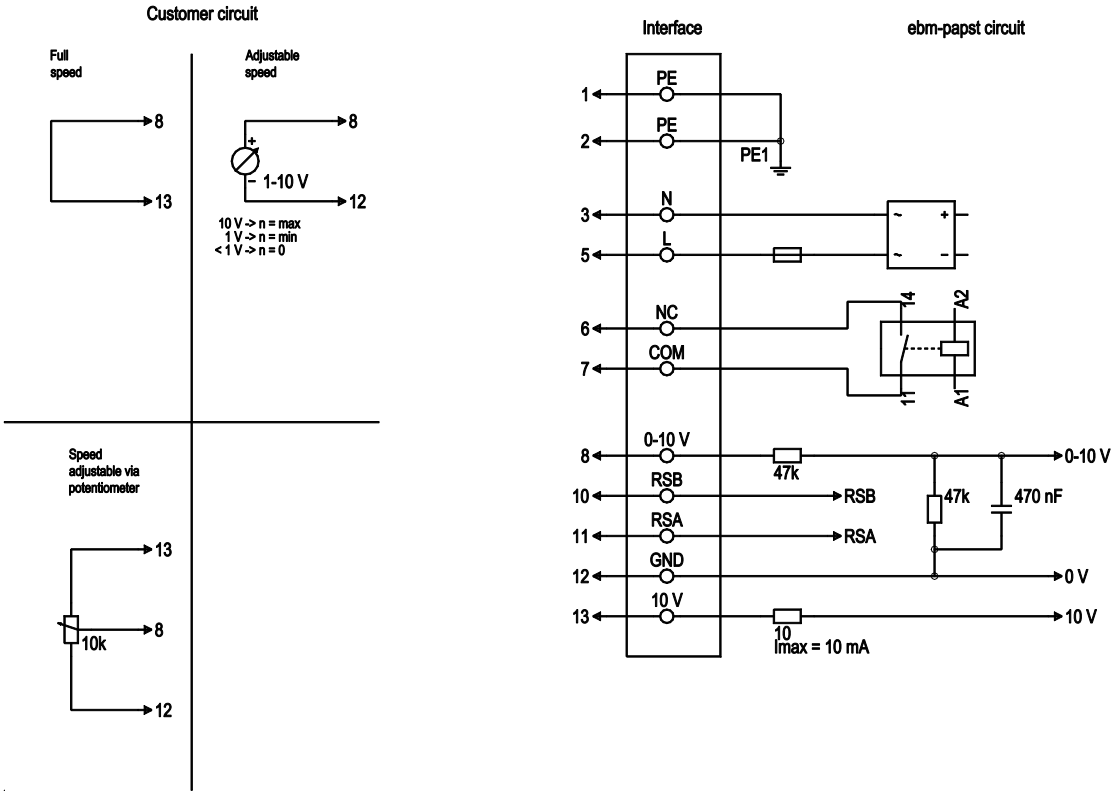

No.	Conn.	Designation	Color	Function/assignment
1	1, 2	PE	green/yellow	Protective earth
1	3	N	blue	Power supply, neutral conductor, 50/60 Hz
1	5	L	black	Power supply, phase, 50/60 Hz
1	6	NC	white 1	Status relay, floating status contact; break for failure, contact rating 250 VAC / 2A (AC1) / min. 10 mA, basic insulation on supply side and reinforced insulation on control interface side
1	7	COM	white 2	Status relay, floating status contact; common connection, contact rating 250 VAC / 2A (AC1) / min. 10 mA, basic insulation on supply side and reinforced insulation on control interface side
2	8	0-10V	yellow	Analog input (set value); 0-10 V; Ri = 100 kΩ; adjustable curve
2	10	RSB	brown	RS485 interface for MODBUS, RSB
2	11	RSA	white	RS485 interface for MODBUS, RSA
2	12	GND	blue	Reference ground for control interface, SELV
2	13	+10V	red	Fixed voltage output 10 VDC, +10 V ±3%; max. 10 mA; short-circuit-proof; power supply for external devices (e.g. pot)

ebm-papst Mulfingen GmbH & Co. KG · Bachmühle 2 · D-74673 Mulfingen · Phone +49 (0) 7938 81-0 · Fax +49 (0) 7938 81-110 · info1@de.ebmpapst.com · www.ebmpapst.com

EC centrifugal module - RadiCal

backward-curved, single-intake

with support bracket

Curves: Air performance 50 Hz

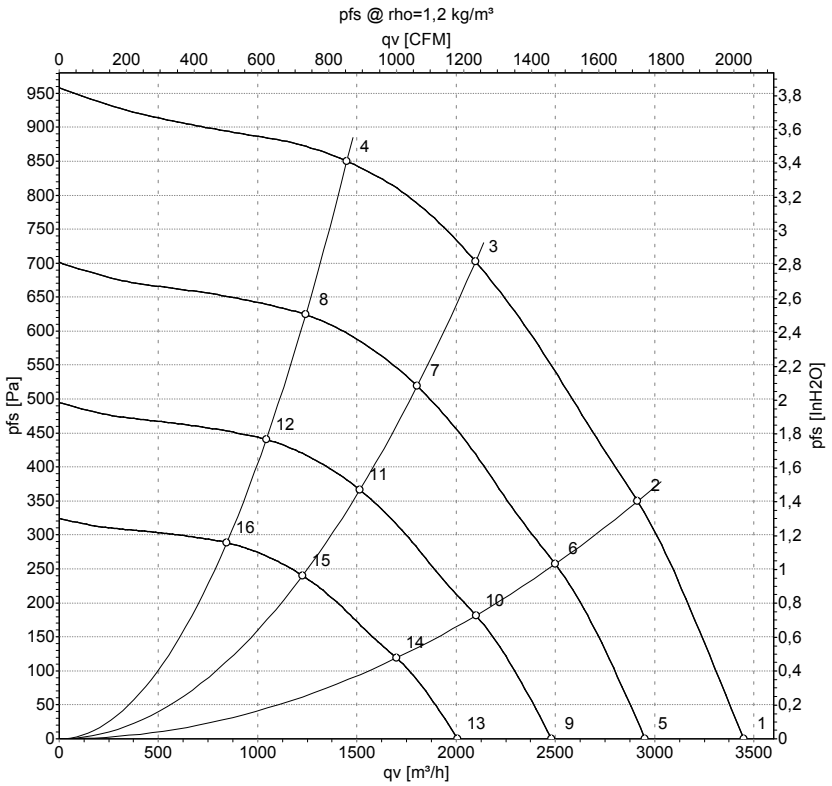

Measurement: LU-151716-1

Air performance measured according to ISO 5801 installation category A. For detailed information on the measurement setup, contact ebm-papst. Intake sound level: Sound power level according to ISO 13347 / sound pressure level measured at 1 m distance from fan axis. The values given are valid under the specified measuring conditions and may vary due to conditions of installation. For deviations from the standard configuration, the parameters have to be checked on the installed unit.

Measured values

	U	f	n	P_{ed}	I	LpA_{in}	LwA_{in}	qv	p_{fs}
	V	Hz	min^{-1}	W	A	dB(A)	dB(A)	m^3/h	Pa
1	230	50	2900	487	2.18	79	86	3450	0
2	230	50	2900	603	2.67	74	81	2915	350
3	230	50	2900	660	2.90	68	76	2100	700
4	230	50	2900	603	2.67	71	79	1450	850
5	230	50	2500	305	1.37	75	82	2950	0
6	230	50	2500	380	1.68	70	77	2500	258
7	230	50	2500	419	1.85	64	72	1805	522
8	230	50	2500	380	1.68	67	75	1240	625
9	230	50	2100	181	0.81	70	78	2480	0
10	230	50	2100	225	1.00	65	73	2100	182
11	230	50	2100	249	1.09	60	67	1515	369
12	230	50	2100	225	1.00	63	71	1045	441
13	230	50	1700	96	0.43	65	72	2005	0
14	230	50	1700	120	0.53	60	68	1700	119
15	230	50	1700	132	0.58	54	62	1225	242
16	230	50	1700	119	0.53	58	65	845	289

U = Power supply · f = Frequency · n = Speed · P_{ed} = Power consumption · I = Current draw · LpA_{in} = Sound pressure level intake side · LwA_{in} = Sound power level intake side
qv = Air flow · p_{fs} = Pressure increase

ebm-papst Mulfingen GmbH & Co. KG · Bachmühle 2 · D-74673 Mulfingen · Phone +49 (0) 7938 81-0 · Fax +49 (0) 7938 81-110 · info1@de.ebmpapst.com · www.ebmpapst.com