K3G500-AQ33-01

EC centrifugal module - RadiPac

backward curved, single inlet

with support bracket

ebm-papst Mulfingen GmbH & Co. KG
Bachmühle 2 · D-74673 Mulfingen
Phone +49 7938 81-0
Fax +49 7938 81-110
info1@de.ebmpapst.com
www.ebmpapst.com

Limited partnership · Headquarters Mulfingen
County court Stuttgart · HRA 590344

General partner Elektrobau Mulfingen GmbH · Headquarters Mulfingen
County court Stuttgart · HRB 590142

ErP2015 EXCEEDS THE NORM

Nominal data

Type	**K3G500-AQ33-01**	
Motor	**M3G150-IF**	
Phase		3~
Nominal voltage	VAC	400
Nominal voltage range	VAC	380 .. 480
Frequency	Hz	50/60
Type of data definition		ml
Speed	min^{-1}	2200
Power input	W	5500
Current draw	A	8.4
Min. ambient temperature	°C	-25
Max. ambient temperature	°C	45

ml = Max. load · me = Max. efficiency · fa = Running at free air · cs = Customer specs · cu = Customer unit
Subject to alterations

Data according to ErP directive

Installation category	A
Efficiency category	Static
Variable speed drive	Yes
Specific ratio*	1.01

* Specific ratio = 1 + p_{fs} / 100 000 Pa

		Actual	Request 2013	Request 2015
Overall efficiency η_{es}		64.1	55.3	59.3
Efficiency grade N		66.8	58	62
Power input P_{ed}	kW	5.48		
Air flow q_v	m^3/h	9955		
Pressure increase p_{fs}	Pa	1223		
Speed n	min^{-1}	2220		

Data definition with optimum efficiency.
The ErP data is determined using a motor-impeller combination in a standardised measurement configuration.

EC centrifugal module - RadiPac

backward curved, single inlet

with support bracket

Technical features

Mass	56 kg
Size	500 mm
Surface of rotor	Coated in black
Material of electronics housing	Die-cast aluminium
Material of impeller	Aluminium sheet
Material of mounting plate	Sheet steel, hot-galvanised
Material of support bracket	Steel, coated in black
Material of inlet nozzle	Sheet steel, hot-galvanised
Number of blades	7
Direction of rotation	Clockwise, seen on rotor
Type of protection	IP 54
Insulation class	"F"
Humidity class	F4-1
Max. permissible ambient motor temp. (transp./ storage)	+80 °C
Min. permissible ambient motor temp. (transp./storage)	-40 °C
Mounting position	Shaft horizontal or rotor on bottom; rotor on top on request
Condensate discharge holes	Rotor-side
Operation mode	S1
Motor bearing	Ball bearing
Technical features	- RS485 MODBUS RTU - PFC, passive - Control input 0-10 VDC / PWM - Over-temperature protected electronics / motor - Alarm relay - Integrated PID controller - Input for sensor 0-10 V or 4-20 mA - Output for slave 0-10 V - Motor current limit - Soft start - Line undervoltage / phase failure detection - Output 10 VDC, max. 10 mA - Output 20 VDC, max. 50 mA - External 24 V input (setting parameters)
EMC interference immunity	Acc. to EN 61000-6-2 (industrial environment)
EMC interference emission	Acc. to EN 61000-6-3 (household environment)
Touch current acc. IEC 60990 (measuring network Fig. 4, TN system)	<= 3.5 mA
Electrical leads	Via terminal box
Motor protection	Reverse polarity and locked-rotor protection
Protection class	I (if protective earth is connected by customer)
Product conforming to standard	EN 61800-5-1; CE
Approval	UL 1004-7 + 60730; GOST; C22.2 Nr.77 + CAN/CSA-E60730-1

ebm-papst Mulfingen GmbH & Co. KG · Bachmühle 2 · D-74673 Mulfingen · Phone +49 (0) 7938 81-0 · Fax +49 (0) 7938 81-110 · info1@de.ebmpapst.com · www.ebmpapst.com

EC centrifugal module - RadiPac

backward curved, single inlet

with support bracket

Product drawing

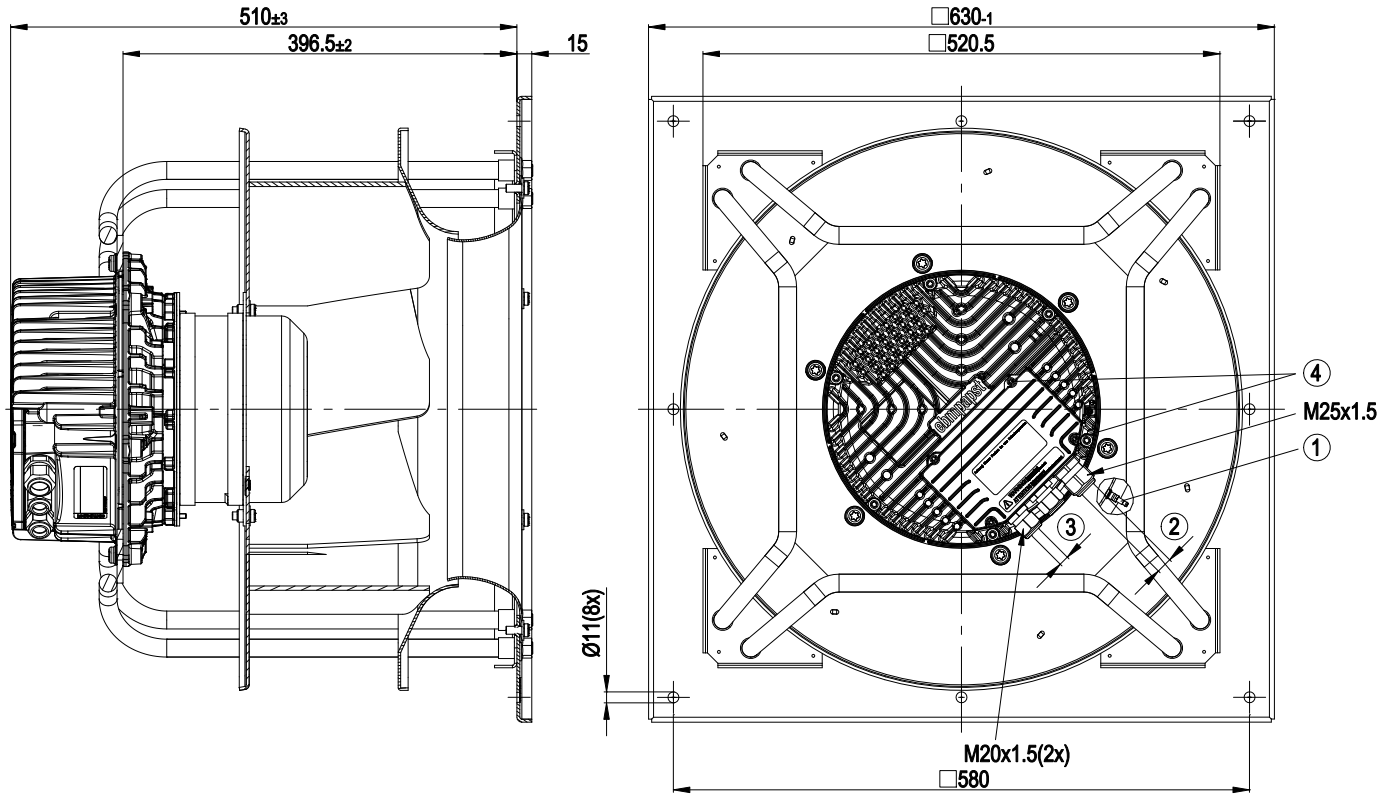

1	Inlet nozzle with bleeder connection for pressure relief (k-factor: 281)
2	Cable diameter: min. 9 mm, max. 16 mm; tightening torque: 6±0. Nm
3	Cable diameter: min. 4 mm, max. 10 mm; tightening torque: 4±06 Nm
4	Tightening torque 3,5±0,5 Nm

ebm-papst Mulfingen GmbH & Co. KG · Bachmühle 2 · D-74673 Mulfingen · Phone +49 (0) 7938 81-0 · Fax +49 (0) 7938 81-110 · info1@de.ebmpapst.com · www.ebmpapst.com

EC centrifugal module - RadiPac

backward curved, single inlet

with support bracket

Connection screen

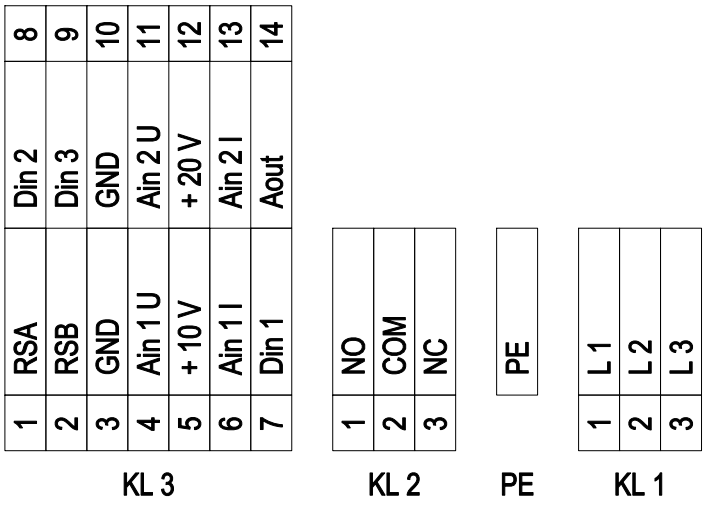

No.	Pin	Signal	Function / assignment
KL 1	1	L1	Mains supply connection, supply voltage 3~380-480 VAC; 50/60 Hz
KL 1	2	L2	Mains supply connection, supply voltage 3~380-480 VAC; 50/60 Hz
KL 1	3	L3	Mains supply connection, supply voltage 3~380-480 VAC; 50/60 Hz
PE		PE	Earth connection, PE connection
KL 2	1	NO	Status relay, floating status contact; normally open; close with error
KL2	2	COM	Status relay; floating status contact; changeover contact; common connection; contact rating 250 VAC / max. 2 A (AC1) / min. 10 mA
KL2	3	NC	Status relay, floating status contact; break with error
KL 3	1	RSA	Bus connection RS485; RSA; MODBUS RTU
KL 3	2	RSB	Bus connection RS485; RSB; MODBUS RTU
KL 3	3 / 10	GND	Signal ground for control interface KL3
KL 3	4	Ain1 U	Analogue input 1 (set value); 0-10 V; Ri= 100 kΩ; parametrisable curves; only usable as alternative to input Ain1 I
KL 3	5	+ 10 V	Fixed voltage output 10 VDC; + 10 V +/-3%; max. 10 mA; short circuit proof; power supply for ext. devices (e.g. potentiometer)
KL 3	6	Ain1 I	Analogue input 1 (set value); 4-20 mA; Ri= 100 Ω; parametrisable curves; only usable as alternative to input Ain1 U
KL 3	7	Din1	Digital input 1: enabling of electronics; enabling: open pin or applied voltage 5 to 50 VDC; disabling: bridge to GND or applied voltage < 1 VDC; reset function: triggers software reset after a level change to <1 V
KL 3	8	Din2	Digital input 2: parameter set switch 1/2; according to EEPROM setting, the valid/used parameter set is selectable per BUS or per digital input DIN2. Parameter set 1: open pin or applied voltage 5 to 50 VDC; parameter set 2: bridge to GND or applied voltage < 1 VDC
KL 3	9	Din3	Digital input 3: Control characteristic of the integrated controller; according to EEPROM setting, the control characteristic of the integrated controller is normally/inversely selectable per BUS or per digital input; normal: open pin or applied voltage 5 to 50 VDC (control deviation = actual sensor value - set value) inverse: bridge to GND or applied voltage < 1 VDC (control deviation = set value - actual sensor value)
KL 3	11	Ain2 U	Analogue input 2; actual sensor value 0-10 V; Ri= 100 kΩ; parametrisable curve; only usable as alternative to input Ain2 I
KL 3	12	+ 20 V	Fixed voltage output 20 VDC; + 20 V +25/-10 %; max. 50 mA; short circuit proof; power supply for ext. devices (e.g. sensors)
KL 3	13	Ain2 I	Analogue input 2; actual sensor value 4-20 mA; Ri= 100 Ω; parametrisable curve; only usable as alternative to input Ain2 U
KL 3	14	Aout	Analogue output 0-10 V; max. 5 mA; output of the actual motor control factor (output voltage of electronics)/ of the actual motor speed; function selectable per bus; parametrisable curve.

ebm-papst Mulfingen GmbH & Co. KG · Bachmühle 2 · D-74673 Mulfingen · Phone +49 (0) 7938 81-0 · Fax +49 (0) 7938 81-110 · info1@de.ebmpapst.com · www.ebmpapst.com

EC centrifugal module - RadiPac

backward curved, single inlet

with support bracket

Charts: Air flow 50 Hz

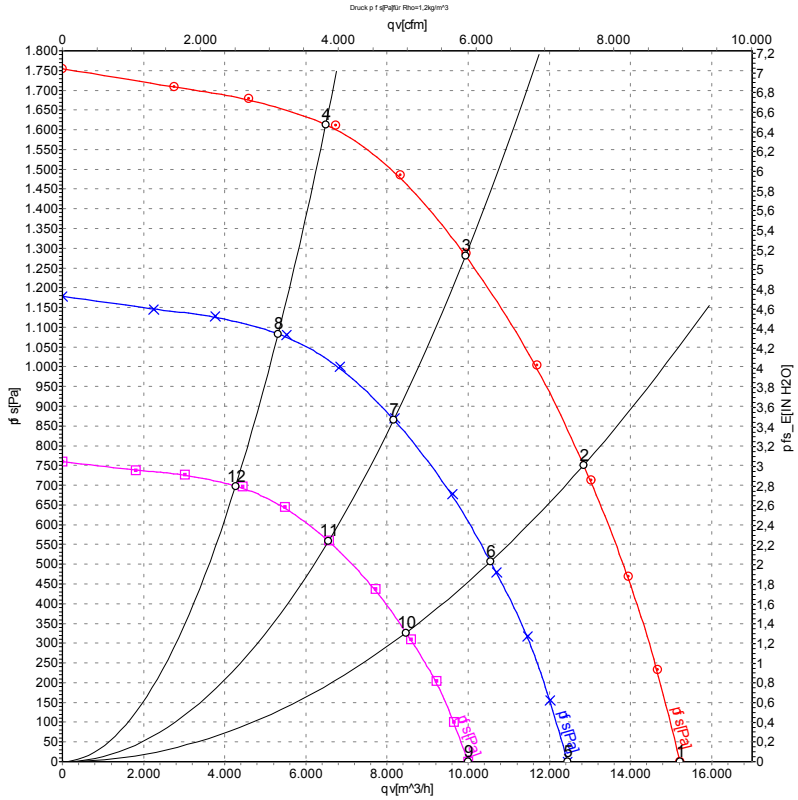

Measurement: LU-128472

Air performance measured as per ISO 5801 Installation category A. For detailed information on the measuring set-up, please contact ebm-papst. Suction-side noise levels: LwA measured as per ISO 13347 / LpA measured with 1m distance to fan axis. The values given are valid under the measuring conditions mentioned above and may vary according to the actual installation situation. With any deviation from the standard set-up, the specific values have to be checked and reviewed with the unit installed.

Measured values

	U	f	n	P_{ed}	I	LpA_{in}	LwA_{in}	LwA_{out}	qv	p_{fs}
	V	Hz	min^{-1}	W	A	dB(A)	dB(A)	dB(A)	m^3/h	Pa
1	400	50	2200	3725	5.82	92	100	105	15220	0
2	400	50	2200	4944	7.64	87	94	98	12850	750
3	400	50	2200	5500	8.40	82	89	94	9935	1290
4	400	50	2200	5148	7.95	83	90	96	6490	1600
5	400	50	1825	2039	3.19	88	95	101	12450	0
6	400	50	1825	2736	4.23	82	90	94	10550	508
7	400	50	1825	3052	4.70	78	84	90	8165	872
8	400	50	1825	2830	4.37	78	86	92	5315	1086
9	400	50	1465	1055	1.65	83	91	96	9995	0
10	400	50	1465	1416	2.19	78	85	89	8470	327
11	400	50	1465	1578	2.43	73	80	85	6555	562
12	400	50	1465	1464	2.26	74	81	87	4270	700

U = Supply voltage · f = Frequency · n = Speed · P_{ed} = Power input · I = Current draw · LpA_{in} = Sound pressure level inlet side · LwA_{in} = Sound power level inlet side · LwA_{out} = Sound power level outlet side
qv = Air flow · p_{fs} = Pressure increase

ebm-papst Mulfingen GmbH & Co. KG · Bachmühle 2 · D-74673 Mulfingen · Phone +49 (0) 7938 81-0 · Fax +49 (0) 7938 81-110 · info1@de.ebmpapst.com · www.ebmpapst.com