AC motor

ebm-papst Mulfingen GmbH & Co. KG
Bachmühle 2 · D-74673 Mulfingen
Phone +49 7938 81-0
Fax +49 7938 81-110
info1@de.ebmpapst.com
www.ebmpapst.com

Limited partnership · Headquarters Mulfingen
County court Stuttgart · HRA 590344

General partner Elektrobau Mulfingen GmbH · Headquarters Mulfingen
County court Stuttgart · HRB 590142

Nominal data

Type	**M4Q045-BD01-A4**
Motor	**M4Q045-BD**

Phase		1~	1~
Nominal voltage	VAC	230	230
Frequency	Hz	50	60
Type of data definition		me	me
Valid for approval / standard		CE	CE
Speed	min^{-1}	1300	1550
Power input	W	29	26
Power output	W	5	5
Current draw	A	0.19	0.17
Rated torque	Ncm	3	3
Medium start-up torque	Ncm	2.2	1.7
Max. ambient temperature	°C	-	-
Starting current	A	0.25	0.22

ml = max. load · me = max. efficiency · fa = running at free air · cs = customer specs · cu = customer unit
Subject to alterations

Technical features

Mass	0.9 kg
Size	45 mm
Surface of rotor	Partially cast in aluminium
Material of end shield	Die-cast aluminium
Direction of rotation	Counter-clockwise, seen on rotor
Type of protection	IP 42
Insulation class	"B"
Max. permissible ambient motor temp. (transp./ storage)	+ 80 °C
Min. permissible ambient motor temp. (transp./storage)	- 40 °C
Mounting position	Shaft horizontal
Condensate discharge holes	None
Operation mode	S1
Motor bearing	Calotte bearing
Touch current acc. IEC 60990 (measuring network Fig. 4, TN system)	< 0.75 mA
Motor protection	Impedance protected
Cable exit	Lateral
Protection class	I (if protective earth is connected by customer)
Product conforming to standard	EN 60335-1; CE
Approval	VDE

ebm-papst Mulfingen GmbH & Co. KG · Bachmühle 2 · D-74673 Mulfingen · Phone +49 (0) 7938 81-0 · Fax +49 (0) 7938 81-110 · info1@de.ebmpapst.com · www.ebmpapst.com

Product drawing

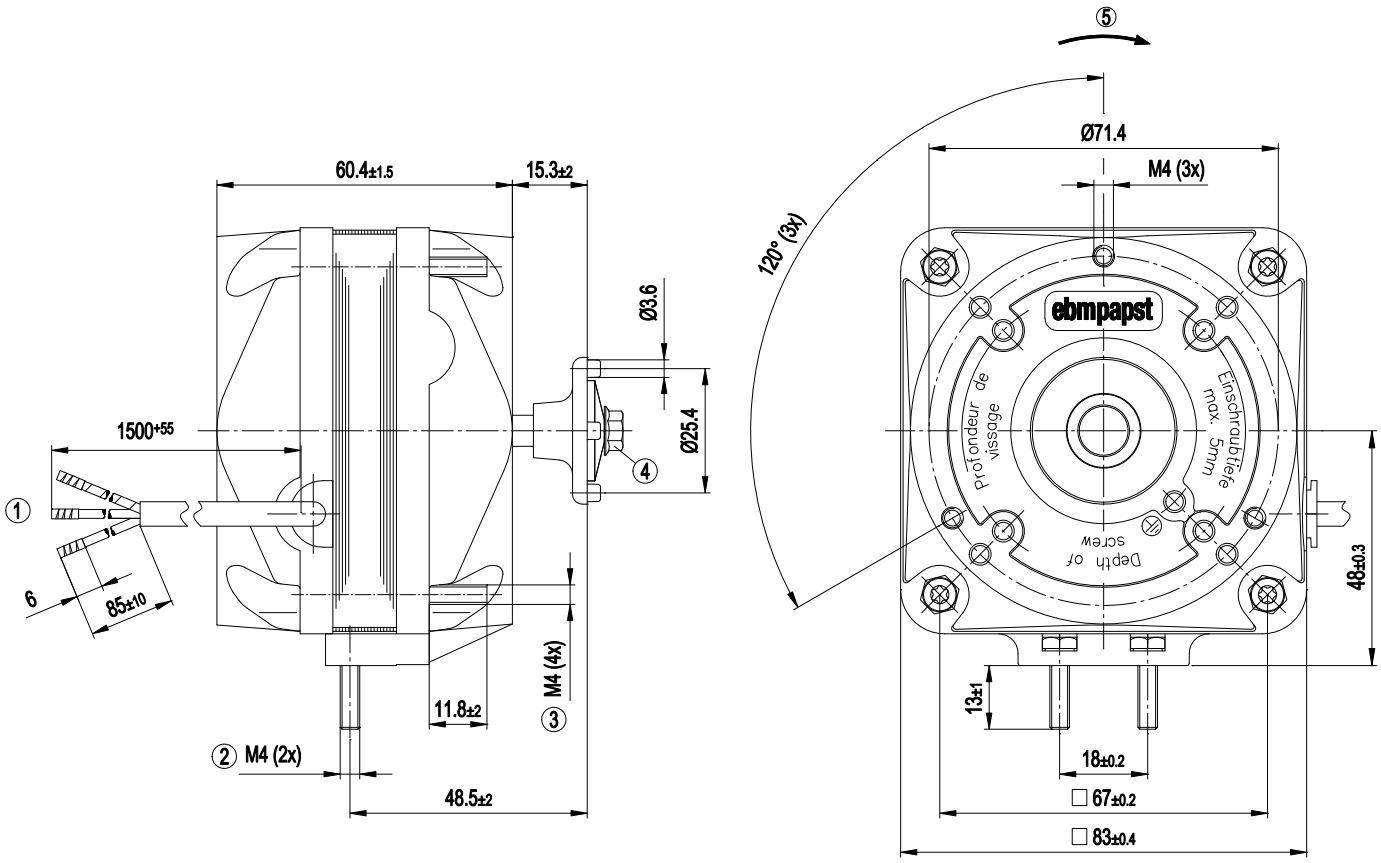

1	Connection line PVC 3G 0.5 mm², 3x brass lead tips crimped
2	Accessory parts: 2 pcs. knurled hexagon nut M4 included separately; tightening torque for fastening the mounting bracket 2.3 Nm
3	Nut tightening torque, for fastening the wall ring or guard grille: 2.3 Nm
4	Screw tightening torque, for fastening the impeller: 1.4 Nm
5	Direction of rotation counter-clockwise, seen on shaft end

Connection screen

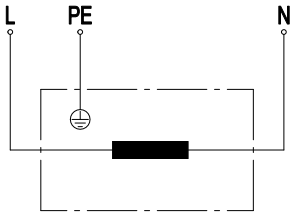

L	blue	PE	green/yellow	N	brown

ebm-papst Mulfingen GmbH & Co. KG · Bachmühle 2 · D-74673 Mulfingen · Phone +49 (0) 7938 81-0 · Fax +49 (0) 7938 81-110 · info1@de.ebmpapst.com · www.ebmpapst.com

Charts: Speed

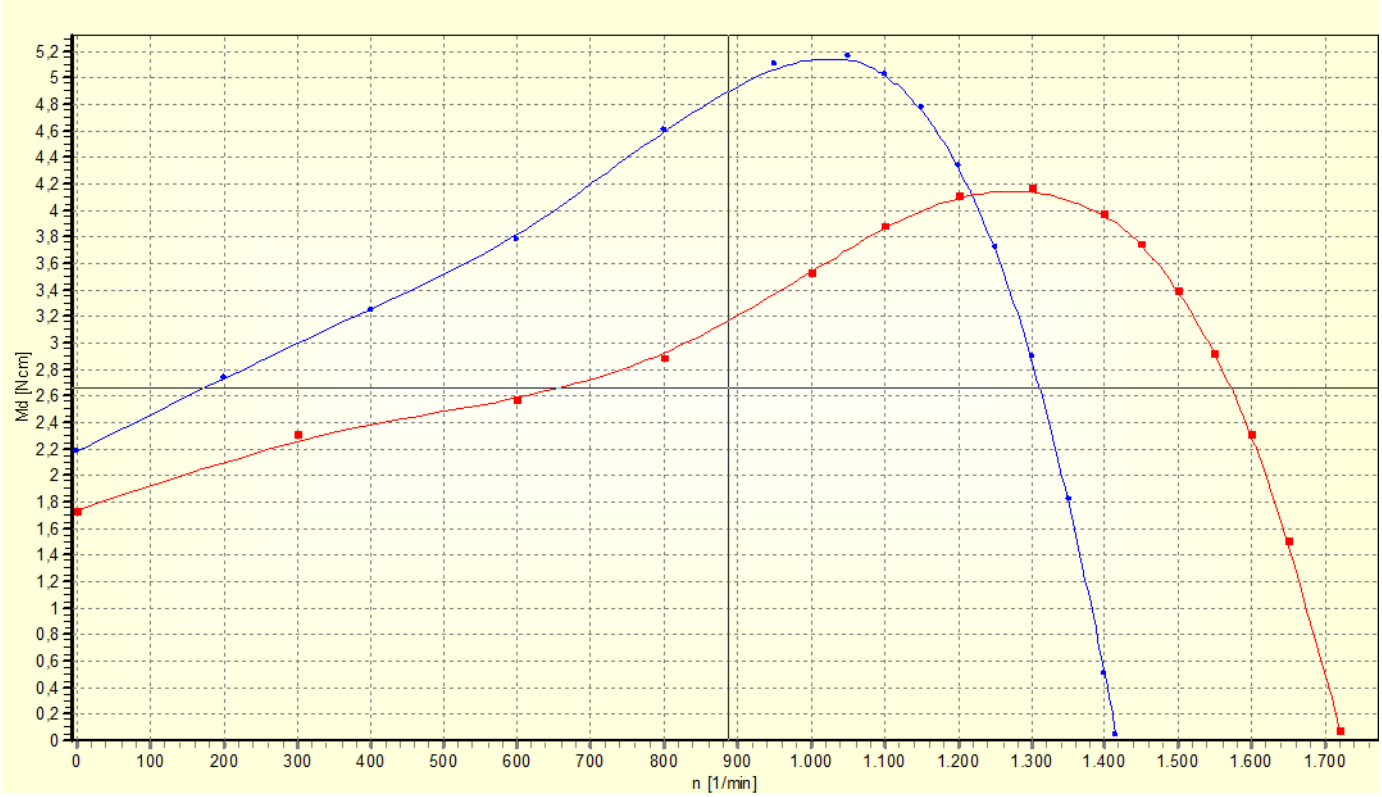

ebm-papst Mulfingen GmbH & Co. KG · Bachmühle 2 · D-74673 Mulfingen · Phone +49 (0) 7938 81-0 · Fax +49 (0) 7938 81-110 · info1@de.ebmpapst.com · www.ebmpapst.com