# AC motor

**ebm-papst Mulfingen GmbH & Co. KG**
Bachmühle 2
D-74673 Mulfingen
Phone: +49(0)7938/81-0
Fax: +49(0)7938/81-110
info1@de.ebmpapst.com
www.ebmpapst.com

## Nominal data

| | |
|---|---|
| **Type** | **M4Q045-DA05-75** |
| **Motor** | **M4Q045-DA** |

| | | | |
|---|---|---|---|
| Phase | | 1~ | 1~ |
| Nominal voltage | [V] | 230 | 230 |
| Frequency | [Hz] | 50 | 60 |
| Type of data definition | | me | me |
| Valid for approval / standard | | CE | CE |
| Speed | [min$^{-1}$] | 1300 | 1550 |
| Power input | [W] | 86 | 80 |
| Power output | [W] | 23 | 25 |
| Current draw | [A] | 0.62 | 0.55 |
| Rated torque | [Ncm] | 17 | 15.5 |
| Medium start-up torque | [Ncm] | 8.5 | 6.5 |
| Max. ambient temperature | [°C] | 40 | 40 |

ml = max. load · me = max. efficiency · rfa = running at free air · cs = customer specs · cu = customer unit
Subject to alterations

# AC motor

## Technical features

| | |
|---|---|
| **Leackage current** | < 0.75 mA |
| **Size** | 45 mm |
| **Operation mode** | S1 |
| **Direction of rotation** | Counter-clockwise, seen on rotor |
| **Mounting position** | Shaft horizontal |
| **Insulation class** | "B" |
| **Cable exit** | Lateral |
| **Condensate discharge holes** | None |
| **Bearing motor** | Calotte bearing |
| **Mass** | 1.6 kg |
| **Material of end shield** | Die-cast aluminium |
| **Motor protection** | Thermal overload protector (TOP) wired internally |
| **Product conforming to standard** | CE; EN 60335-1 |
| **Type of protection** | IP 20 |
| **Protection class** | I |
| **Max. permissible ambient motor temp. (transp./ storage)** | + 80 °C |
| **Min. permissible ambient motor temp. (transp./storage)** | - 40 °C |
| **Approval** | VDE |



ebm-papst Mulfingen GmbH & Co. KG · Bachmühle 2 · D-74673 Mulfingen · Phone: +49(0)7938/81-0 · Fax: +49(0)7938/81-110 · info1@de.ebmpapst.com · www.ebmpapst.com

# AC motor

## Product drawing

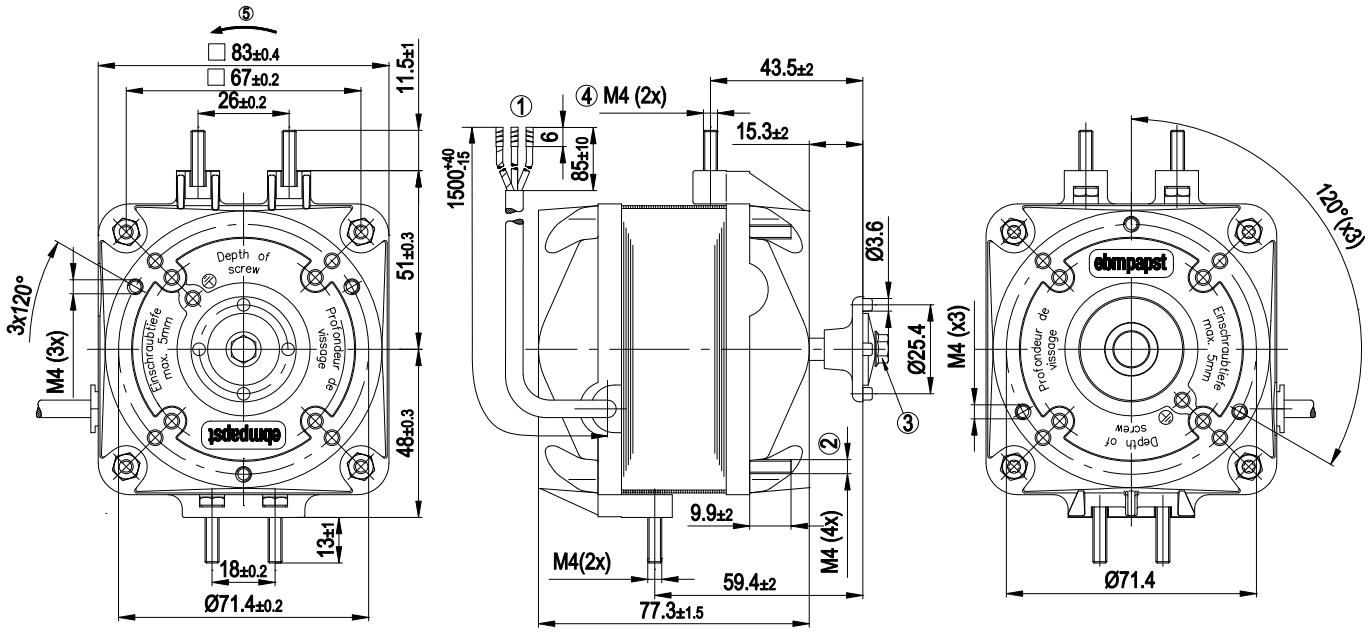


| | |
|---|---|
| 1 | Connection line PVC 3 x 0.5 mm²; 3 x brass lead tips crimped |
| 2 | Nut tightening torque, for fastening the wall ring or guard grille: 2.3 Nm |
| 3 | Screw tightening torque, for fastening the impeller: 1.4 Nm |
| 4 | Nut tightening torque, for fastening the mounting bracket: 2.3 Nm |
| 5 | Direction of rotation counter-clockwise, seen on shaft end |



ebm-papst Mulfingen GmbH & Co. KG · Bachmühle 2 · D-74673 Mulfingen · Phone: +49(0)7938/81-0 · Fax: +49(0)7938/81-110 · info1@de.ebmpapst.com · www.ebmpapst.com

## Connection screen

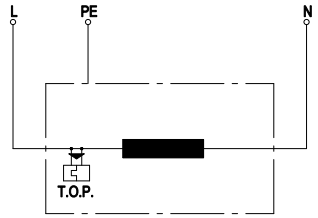


| | |
|---|---|
| L | = blue |
| PE | = green / yellow |
| N | = brown |
| TOP | = Thermal overload protector |



ebm-papst Mulfingen GmbH & Co. KG · Bachmühle 2 · D-74673 Mulfingen · Phone: +49(0)7938/81-0 · Fax: +49(0)7938/81-110 · info1@de.ebmpapst.com · www.ebmpapst.com

## Charts: Speed

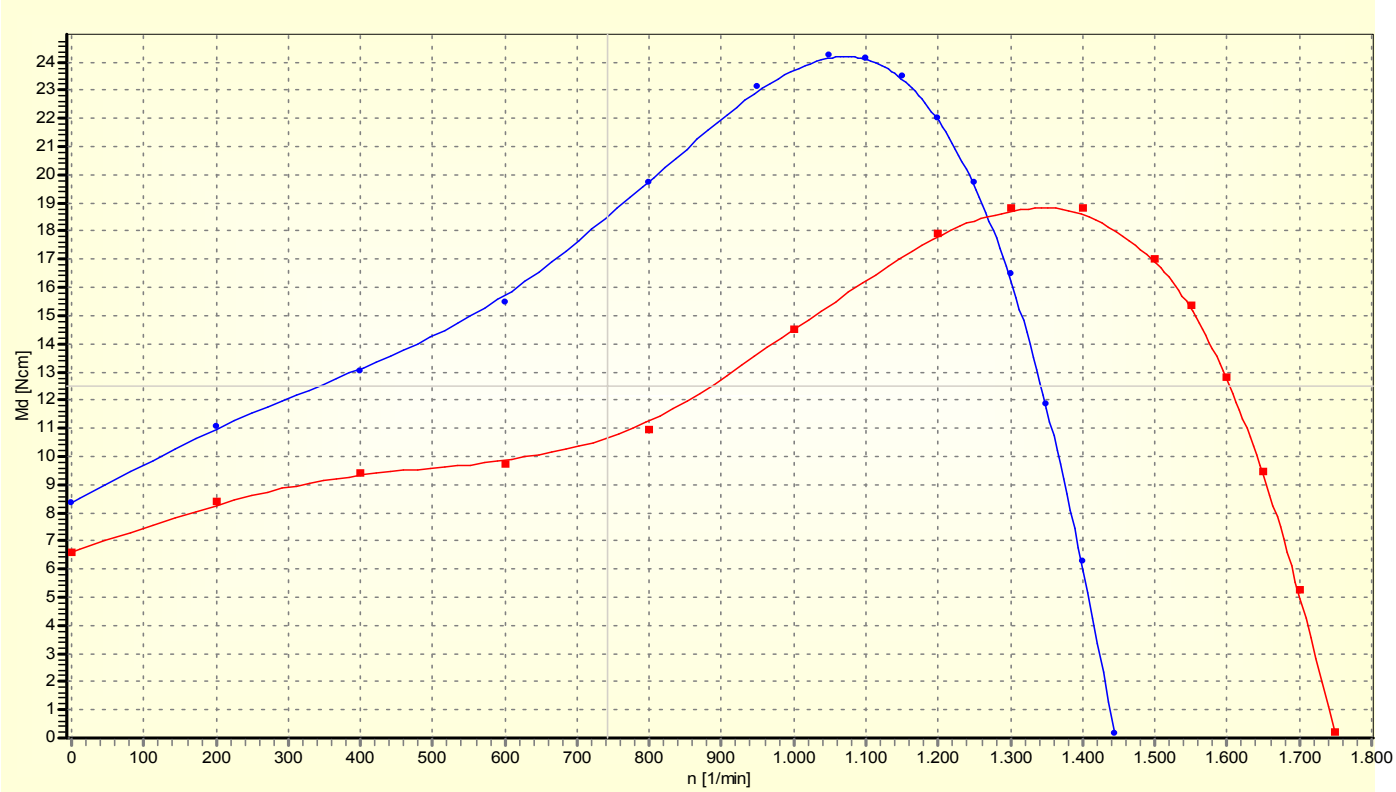




ebm-papst Mulfingen GmbH & Co. KG · Bachmühle 2 · D-74673 Mulfingen · Phone: +49(0)7938/81-0 · Fax: +49(0)7938/81-110 · info1@de.ebmpapst.com · www.ebmpapst.com