AC motor

ebm-papst Mulfingen GmbH & Co. KG
Bachmühle 2 · D-74673 Mulfingen
Phone +49 7938 81-0
Fax +49 7938 81-110
info1@de.ebmpapst.com
www.ebmpapst.com

Limited partnership · Headquarters Mulfingen
County court Stuttgart · HRA 590344

General partner Elektrobau Mulfingen GmbH · Headquarters Mulfingen
County court Stuttgart · HRB 590142

Nominal data

Type	**M4S068-BF08-08**
Motor	**M4S068-BF**

Phase		1~	1~
Nominal voltage	VAC	230	230
Frequency	Hz	50	60
Type of data definition		me	me
Valid for approval / standard		CE	CE
Speed	min^{-1}	1200	1400
Power input	W	28	25
Power output	W	5.8	5.3
Current draw	A	0.18	0.16
Rated torque	Ncm	4.6	3.6
Medium start-up torque	Ncm	2.5	1.5
Min. ambient temperature	°C	-25	-25
Max. ambient temperature	°C	65	75

ml = max. load · me = max. efficiency · fa = running at free air · cs = customer specs · cu = customer unit
Subject to alterations

Technical features

Mass	1.1 kg
Size	68 mm
Surface of rotor	Coated in black
Direction of rotation	Clockwise, seen on rotor
Type of protection	IP 44; Depending on installation and position
Insulation class	"B"
Humidity class	F1-2
Max. permissible ambient motor temp. (transp./ storage)	+ 80 °C
Min. permissible ambient motor temp. (transp./storage)	- 40 °C
Mounting position	Any
Condensate discharge holes	None
Operation mode	S1
Motor bearing	Ball bearing
Touch current acc. IEC 60990 (measuring network Fig. 4, TN system)	< 0.75 mA
Motor protection	Impedance protected
Cable exit	Lateral
Protection class	I (if protective earth is connected by customer)
Product conforming to standard	EN 60335-1; CE
Approval	CCC

ebm-papst Mulfingen GmbH & Co. KG · Bachmühle 2 · D-74673 Mulfingen · Phone +49 (0) 7938 81-0 · Fax +49 (0) 7938 81-110 · info1@de.ebmpapst.com · www.ebmpapst.com

AC motor

Product drawing

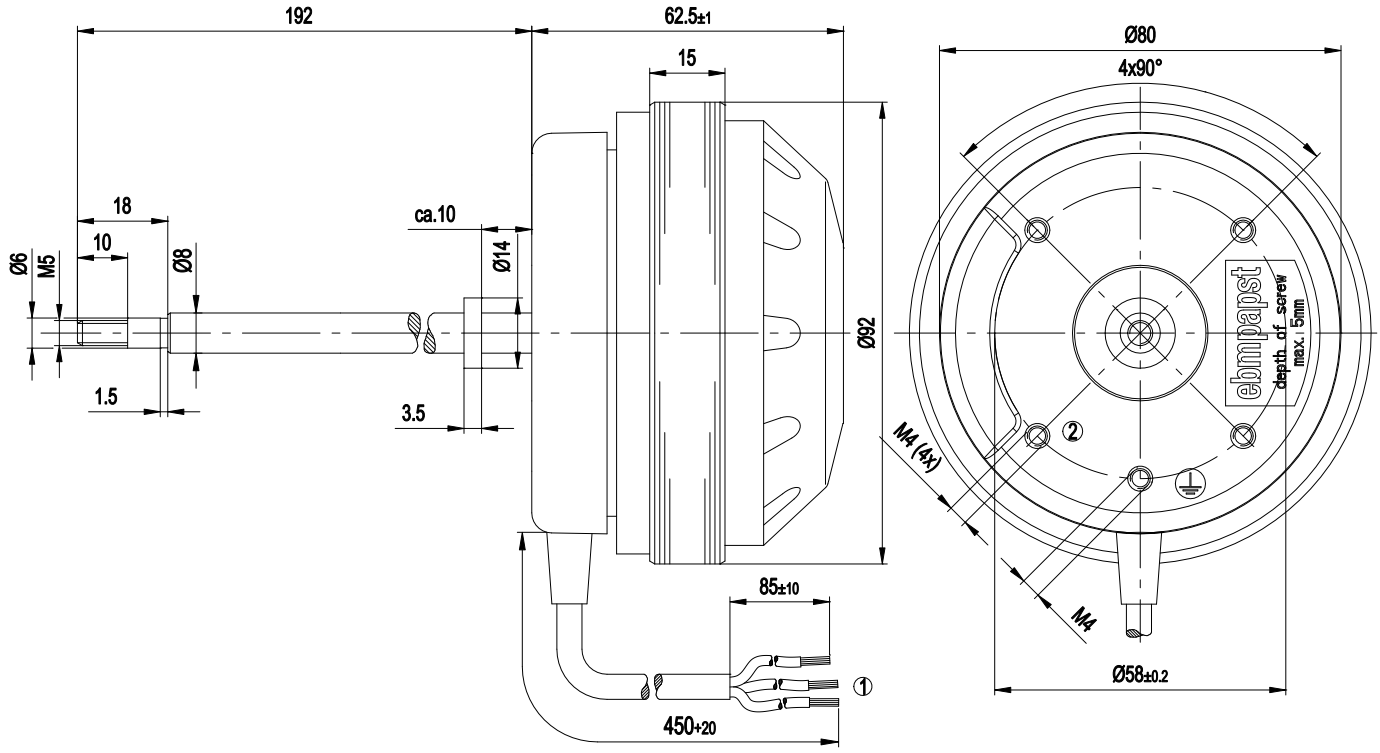

1	Connection line PVC 3 x 0.5 mm², 3x tin-plated lead tips
2	Depth of screw max. 5 mm

Connection screen

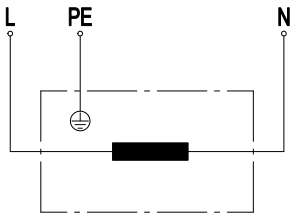

L	blue	PE	green/yellow	N	brown

ebm-papst Mulfingen GmbH & Co. KG · Bachmühle 2 · D-74673 Mulfingen · Phone +49 (0) 7938 81-0 · Fax +49 (0) 7938 81-110 · info1@de.ebmpapst.com · www.ebmpapst.com

Charts: Speed

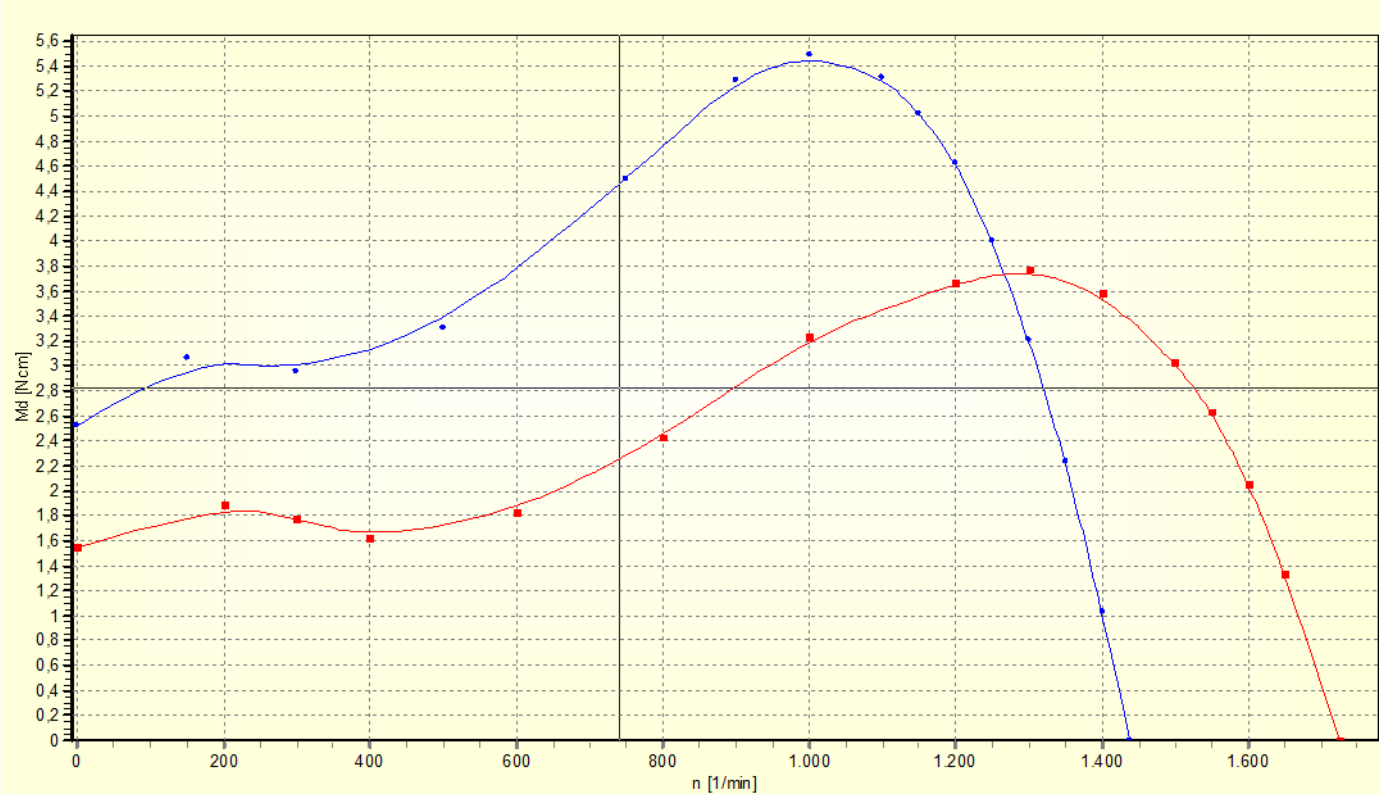

ebm-papst Mulfingen GmbH & Co. KG · Bachmühle 2 · D-74673 Mulfingen · Phone +49 (0) 7938 81-0 · Fax +49 (0) 7938 81-110 · info1@de.ebmpapst.com · www.ebmpapst.com