RV 40-18/12 H

DC centrifugal compact fan

single inlet



ebm-papst St. Georgen GmbH & Co. KG
Hermann-Papst-Straße 1
D-78112 St. Georgen
Phone: +49(0)7724/81-0
Fax: +49(0)7724/81-1309
info2@de.ebmpapst.com
www.ebmpapst.com

Nominal data

Type	RV 40-18/12 H	
Nominal voltage	VDC	12
Nominal voltage range	VDC	9 .. 16
Speed	min^{-1}	4800
Power input	W	4.5
Min. ambient temperature	°C	-20
Max. ambient temperature	°C	70
Air flow	m^3/h	24
Sound power level	dB(A)	5.0

ml = max. load · me = max. efficiency · rfa = running at free air · cs = customer specs · cu = customer unit
Subject to alterations

DC centrifugal compact fan

single inlet

Technical features

Dimensions	105 x 59 x 79 mm
General description	Pressure-optimized housing. Motor has very low structure-borne noise. Forward-curved impeller. Electronic commutation completely integrated.
Connection line	Single strands AWG 26, TR 64, bared and tin-plated.
Locked-rotor protection	Electronic blocking protection
Direction of air flow	Axial air intake, centrifugal air exhaust out of the outlet.
Bearing	Ball bearings
Lifetime L10 at 40 °C	50000 h
Lifetime L10 at maximum temperature	25000 h
Mass	0.100 kg
Housing material	Scroll housing of fiberglass-reinforced plastic.
Material of impeller	Fiberglass-reinforced plastic
Motor protection	Protected against reverse polarity and locking.
Approval	VDE, CSA, UL, CE

ebm-papst St. Georgen GmbH & Co. KG · Hermann-Papst-Straße 1 · D-78112 St. Georgen · Phone: +49(0)7724/81-0 · Fax: +49(0)7724/81-1309 · info2@de.ebmpapst.com · www.ebmpapst.com

DC centrifugal compact fan

single inlet

Product drawing

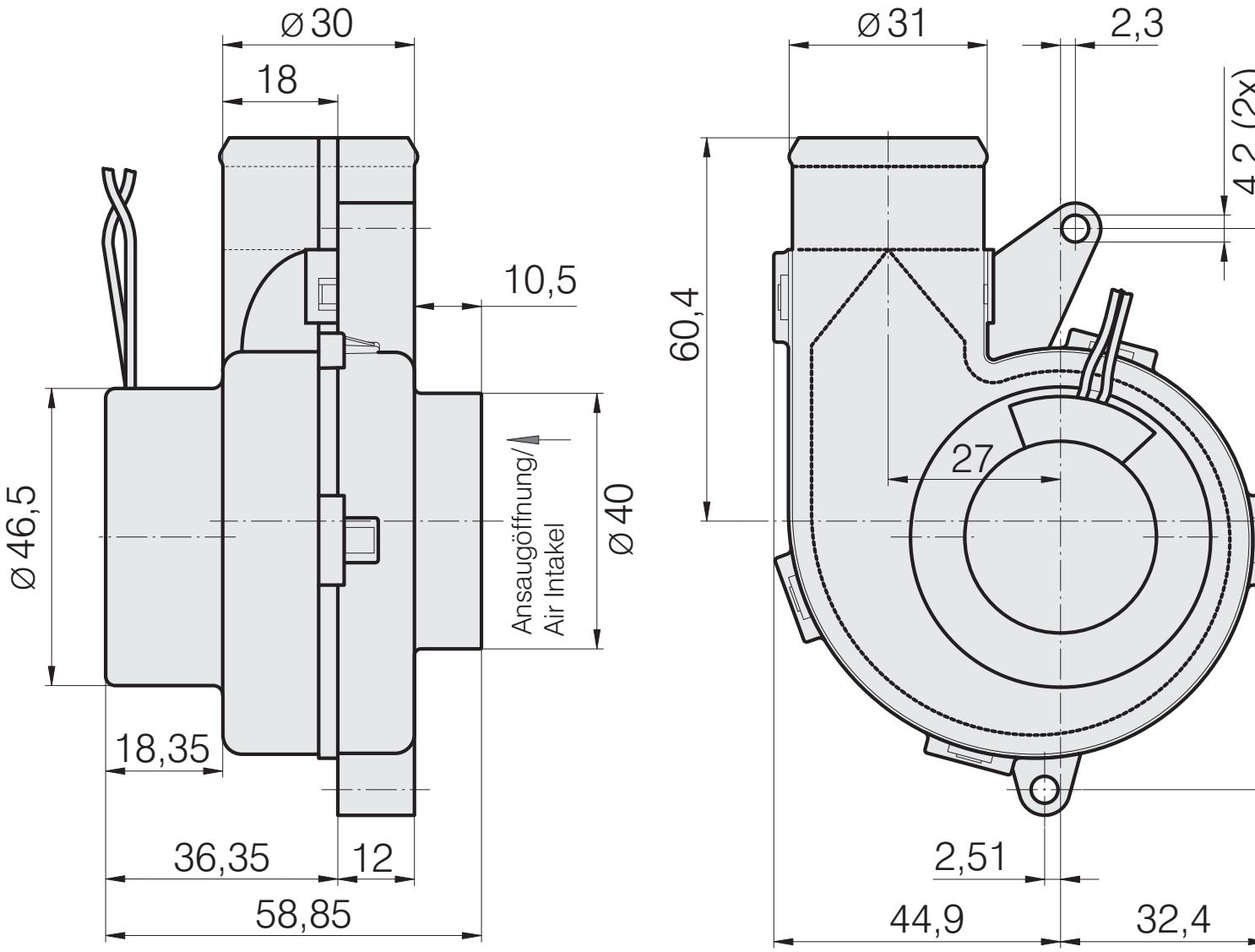

ebm-papst St. Georgen GmbH & Co. KG · Hermann-Papst-Straße 1 · D-78112 St. Georgen · Phone: +49(0)7724/81-0 · Fax: +49(0)7724/81-1309 · info2@de.ebmpapst.com · www.ebmpapst.com

DC centrifugal compact fan

single inlet

Charts: Air flow

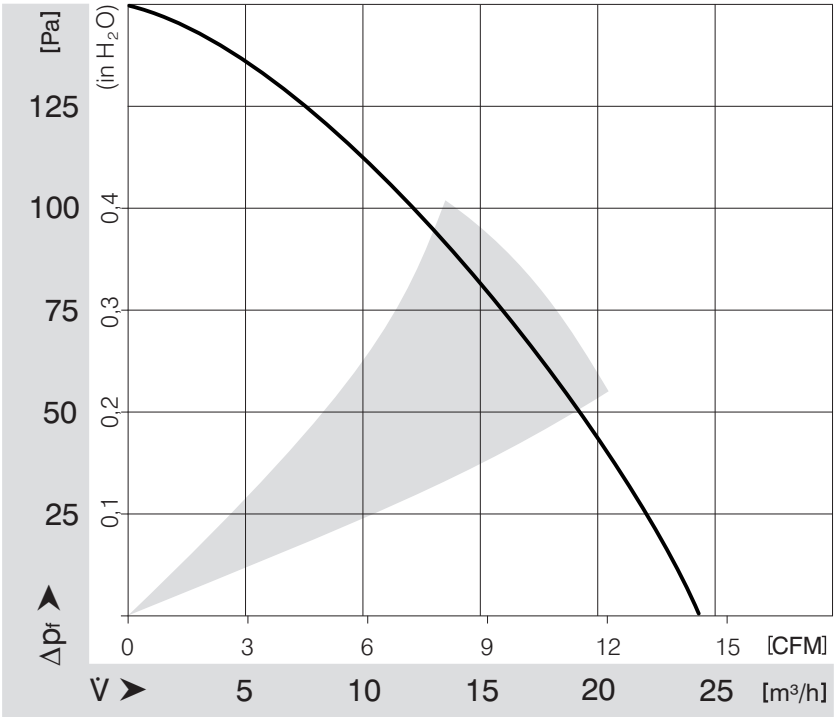

ebm-papst St. Georgen GmbH & Co. KG · Hermann-Papst-Straße 1 · D-78112 St. Georgen · Phone: +49(0)7724/81-0 · Fax: +49(0)7724/81-1309 · info2@de.ebmpapst.com · www.ebmpapst.com