S2D300-AP02-50

AC axial fan

sickled blades (S series)

with guard grille for short nozzle

ebm-papst Mulfingen GmbH & Co. KG
Bachmühle 2 · D-74673 Mulfingen
Phone +49 7938 81-0
Fax +49 7938 81-110
info1@de.ebmpapst.com
www.ebmpapst.com

Limited partnership · Headquarters Mulfingen
County court Stuttgart · HRA 590344

General partner Elektrobau Mulfingen GmbH · Headquarters Mulfingen
County court Stuttgart · HRB 590142

ErP2015 EXCEEDS THE NORM

Nominal data

Type	**S2D300-AP02-50**
Motor	**M2D074-DF**

Phase		3~	3~	3~	3~
Nominal voltage	VAC	230	230	400	400
Connection		Δ	Δ	Y	Y
Frequency	Hz	50	60	50	60
Type of data definition		fa	fa	fa	fa
Valid for approval / standard		CE	CE	CE	CE
Speed	min^{-1}	2580	2750	2580	2750
Power input	W	210	300	210	300
Current draw	A	0.62	0.84	0.36	0.48
Max. back pressure	Pa	200	125	200	125
Min. ambient temperature	°C	-25	-25	-25	-25
Max. ambient temperature	°C	75	40	75	40
Starting current	A	2.0	1.9	1.16	1.1

ml = Max. load · me = Max. efficiency · fa = Running at free air · cs = Customer specs · cu = Customer unit
Subject to alterations

Data according to ErP directive

Installation category	A
Efficiency category	Static
Variable speed drive	No
Specific ratio*	1.00

* Specific ratio = 1 + p_{fs} / 100 000 Pa

		Actual	Request 2013	Request 2015
Overall efficiency η_{es}	%	29.9	25.9	29.9
Efficiency grade N		40	36	40
Power input P_e	kW	0.25		
Air flow q_v	m^3/h	2210		
Pressure increase p_{fs}	Pa	125		
Speed n	min^{-1}	2455		

Data definition with optimum efficiency. LU-62732
The ErP data is determined using a motor-impeller combination in a standardised measurement configuration.

ebmpapst

AC axial fan

sickled blades (S series)

with guard grille for short nozzle

Technical features

Mass	4.2 kg
Size	300 mm
Surface of rotor	Coated in black
Material of terminal box	ABS plastic
Material of blades	Sheet steel, coated in black
Material of guard grille	Steel, coated in black plastic (RAL9005)
Number of blades	5
Direction of air flow	"V"
Direction of rotation	Counter-clockwise, seen on rotor
Type of protection	IP 44; Depending on installation and position as per EN 60034-5
Insulation class	"F"
Humidity class	F1-2
Max. permissible ambient motor temp. (transp./ storage)	+ 80 °C
Min. permissible ambient motor temp. (transp./storage)	- 40 °C
Mounting position	Shaft horizontal or rotor on bottom; rotor on top on request
Condensate discharge holes	Rotor-side
Operation mode	S1
Motor bearing	Ball bearing
Touch current acc. IEC 60990 (measuring network Fig. 4, TN system)	< 0.75 mA
Electrical leads	Via terminal box, integrated capacitor connected via terminal box
Cable exit	Variable
Protection class	I (if protective earth is connected by customer)
Product conforming to standard	EN 60335-1, motor does not have factory-installed overheating protection
Approval	CCC; EAC

ebm-papst Mulfingen GmbH & Co. KG · Bachmühle 2 · D-74673 Mulfingen · Phone +49 (0) 7938 81-0 · Fax +49 (0) 7938 81-110 · info1@de.ebmpapst.com · www.ebmpapst.com

AC axial fan

sickled blades (S series)

with guard grille for short nozzle

Product drawing

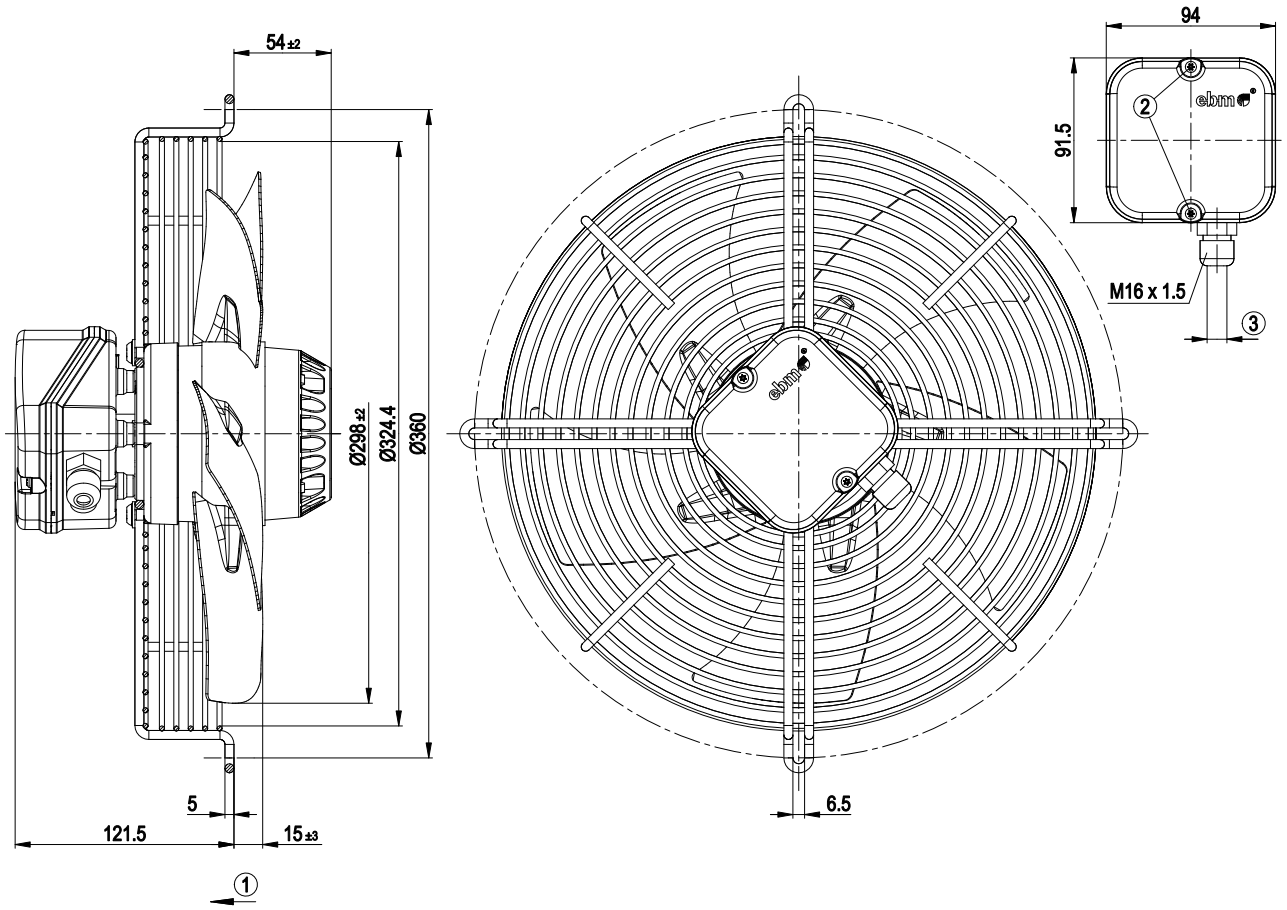

1	Direction of air flow "V"
2	Tightening torque 0.5±0.1 Nm
3	Cable diameter: max. 7.5 mm; tightening torque 1.3±0.15 Nm

ebm-papst Mulfingen GmbH & Co. KG · Bachmühle 2 · D-74673 Mulfingen · Phone +49 (0) 7938 81-0 · Fax +49 (0) 7938 81-110 · info1@de.ebmpapst.com · www.ebmpapst.com

AC axial fan

sickled blades (S series)

with guard grille for short nozzle

Connection screen

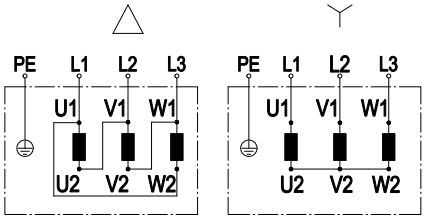

Change direction of rotation by reversing two phases

	Three-phase motor	Δ	Delta connection	Y	Star connection
L1	= U1 = black	L2	= V1 = blue	L3	= W1 = brown
U2	green	V2	white	W2	yellow
PE	green/yellow				

ebm-papst Mulfingen GmbH & Co. KG · Bachmühle 2 · D-74673 Mulfingen · Phone +49 (0) 7938 81-0 · Fax +49 (0) 7938 81-110 · info1@de.ebmpapst.com · www.ebmpapst.com

AC axial fan

sickled blades (S series)

with guard grille for short nozzle

Charts: Air flow 50 Hz

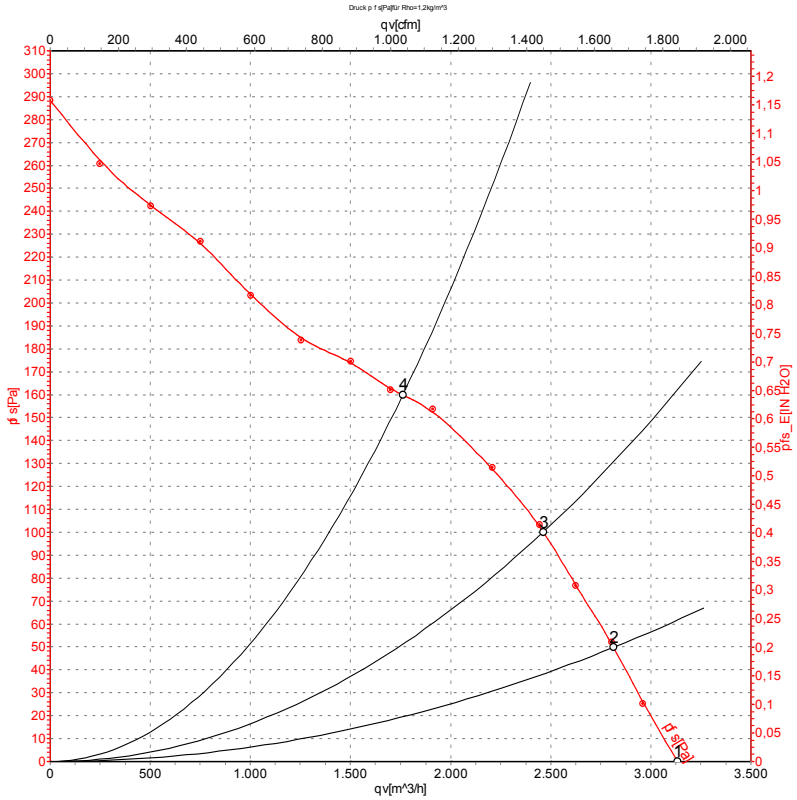

Air performance measured as per ISO 5801 Installation category A. For detailed information on the measuring set-up, please contact ebm-papst. Suction-side noise levels: LwA measured as per ISO 13347 / LpA measured with 1m distance to fan axis. The values given are valid under the measuring conditions mentioned above and may vary according to the actual installation situation. With any deviation from the standard set-up, the specific values have to be checked and reviewed with the unit installed.

Measured values

	U	f	n	P_e	I	LpA_{in}	LwA_{in}	qv	p_{fs}
	V	Hz	min^{-1}	W	A	dB(A)	dB(A)	m^3/h	Pa
1	400	50	2580	210	0.36	71	78	3135	0
2	400	50	2540	227	0.36	71	78	2815	50
3	400	50	2490	244	0.39	70	77	2465	100
4	400	50	2395	278	0.43	71	78	1760	160

U = Supply voltage · f = Frequency · n = Speed · P_e = Power input · I = Current draw · LpA_{in} = Sound pressure level inlet side · LwA_{in} = Sound power level inlet side · qv = Air flow
p_{fs} = Pressure increase

ebm-papst Mulfingen GmbH & Co. KG · Bachmühle 2 · D-74673 Mulfingen · Phone +49 (0) 7938 81-0 · Fax +49 (0) 7938 81-110 · info1@de.ebmpapst.com · www.ebmpapst.com

AC axial fan

sickled blades (S series)

with guard grille for short nozzle

Charts: Air flow 60 Hz

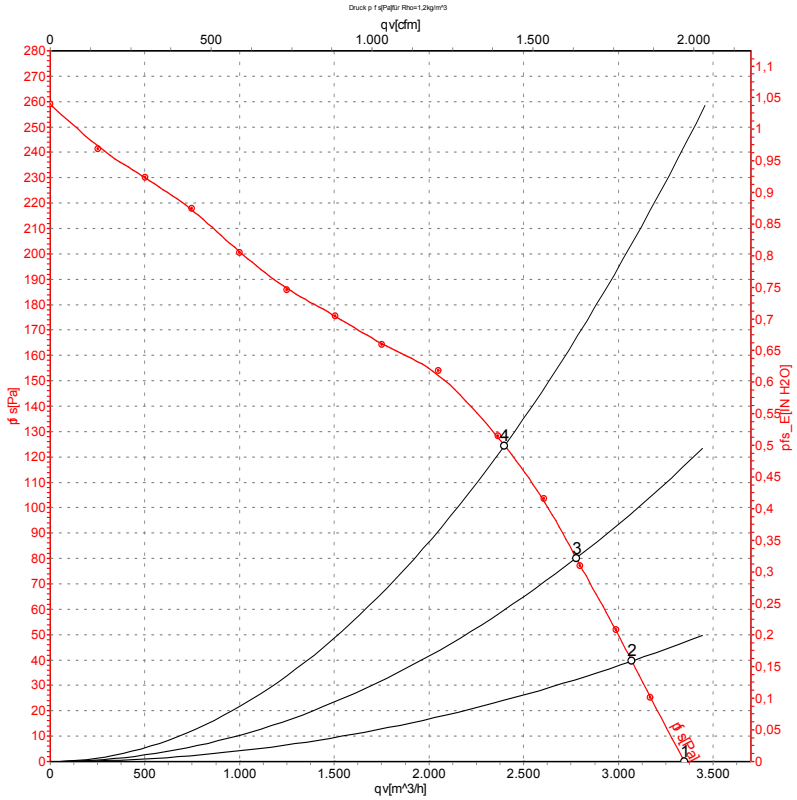

Air performance measured as per ISO 5801 Installation category A. For detailed information on the measuring set-up, please contact ebm-papst. Suction-side noise levels: LwA measured as per ISO 13347 / LpA measured with 1m distance to fan axis. The values given are valid under the measuring conditions mentioned above and may vary according to the actual installation situation. With any deviation from the standard set-up, the specific values have to be checked and reviewed with the unit installed.

Measured values

	U	f	n	P_e	I	LpA_{in}	LwA_{in}	qv	p_{fs}
	V	Hz	min^{-1}	W	A	dB(A)	dB(A)	m^3/h	Pa
1	400	60	2750	300	0.48	73	80	3350	0
2	400	60	2685	316	0.48	72	79	3070	40
3	400	60	2625	331	0.50	72	79	2775	80
4	400	60	2550	347	0.52	71	78	2400	125

U = Supply voltage · f = Frequency · n = Speed · P_e = Power input · I = Current draw · LpA_{in} = Sound pressure level inlet side · LwA_{in} = Sound power level inlet side · qv = Air flow
p_{fs} = Pressure increase

ebm-papst Mulfingen GmbH & Co. KG · Bachmühle 2 · D-74673 Mulfingen · Phone +49 (0) 7938 81-0 · Fax +49 (0) 7938 81-110 · info1@de.ebmpapst.com · www.ebmpapst.com