AC axial fans 6-pole

S series, Ø 420 / 450



- **Material:** Guard grille: Steel, phosphated and coated in black plastic
  Wall ring: Sheet steel, pre-galvanised and coated in black plastic
  Blades: Sheet steel, coated in black
  Rotor: Coated in black
- **Number of blades:** 5
- **Direction of rotation:** Direction of air flow "V" counter-clockwise, direction of air flow "A" counter-clockwise, seen on rotor
- **Type of protection:** IP 44
- **Insulation class:** "F"
- **Mounting position:** Shaft horizontal or rotor on bottom; rotor on top on request
- **Condensate discharges:** Rotor-side
- **Mode of operation:** Continuous operation (S1)
- **Bearings:** Maintenance-free ball bearings

Nominal data

Type	Motor	Curve	Nominal voltage	Frequency	Air flow	Speed/rpm	Power input	Current draw	Capacitor	Sound pressure level	Max. operative range	Perm. amb. temp.	Mass without attachments	Electr. connection
			VAC	Hz	m³/h	rpm	W	A	µF/VDB	dB(A)	Pa	°C	kg	p. 416 f.
*6E 420	M6E 074-EI	Ⓐ	1~ 230	50	3940	940	145	0.67	4.0/450	60	90	-25 to +50	4.4	A1)
			1~ 230	60	4570	1090	205	0.90	4.0/450	63	80	-25 to +45		
*6E 450	M6E 074-GA	Ⓑ	1~ 230	50	4725	940	165	0.80	4.0/450	63	70	-25 to +40	5.0	A1)
			1~ 230	60	5450	1070	225	0.98	4.0/450	67	45	-25 to +40		

subject to alterations

Curves

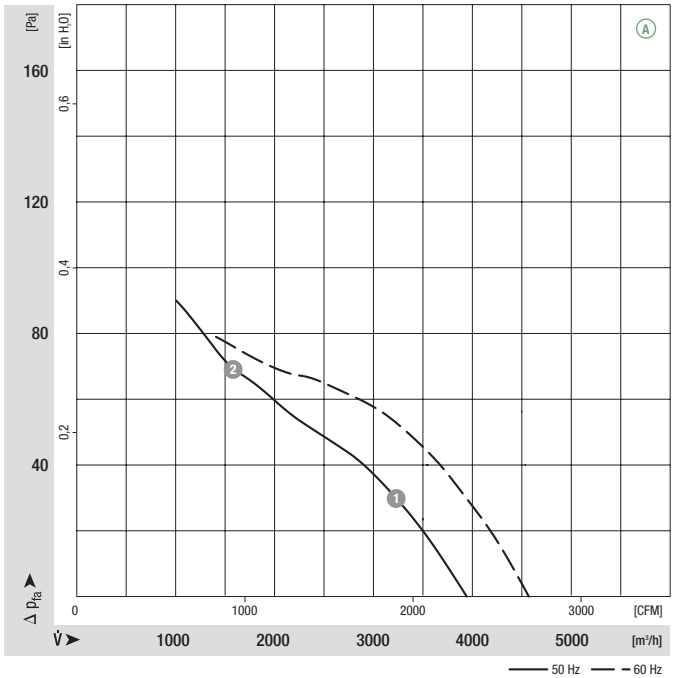

	n [rpm]	P_1 [W]	I [A]
Ⓐ ❶	930	155	0.71
Ⓐ ❷	890	176	0.80

ebmpapst

General information
AC axial fans
AC axial S series
AC axial K series
AC axial A series
EC axial fans
EC axial S series
Q-motor
ESM
EC-SYSTEMS
Accessories
Technology
Contacts

- **Motor protection:** TOP wired internally
- **Cable exit:** Variable
- **Protection class:** I
- **Product conforming to standards:** EN 60335-1, CE
- **Approvals:** CCC
- **Options:** Terminal box

Direction of air flow

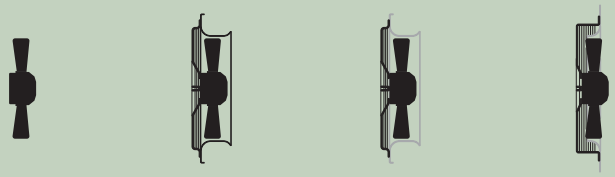

	❮ "V"/"A" ❯ Without attachments	❮ "V"/"A" ❯ With full round nozzle	❮ "V"/"A" ❯ With guard grille for full nozzle	❮ "V"/"A" ❯ With guard grille for short nozzle
"V"	A6E 420-AP02 -01	W6E 420-CP02 -30	S6E 420-BP02 -30	S6E 420-AP02 -30
"A"	A6E 420-AP02 -02	W6E 420-CP02 -31	S6E 420-BP02 -31	S6E 420-AP02 -31
"V"	A6E 450-AP02 -01	W6E 450-CP02 -01	S6E 450-BP02 -01	S6E 450-AP02 -01
"A"	A6E 450-AP02 -02	W6E 450-CP02 -02	S6E 450-BP02 -02	S6E 450-AP02 -02

Curves

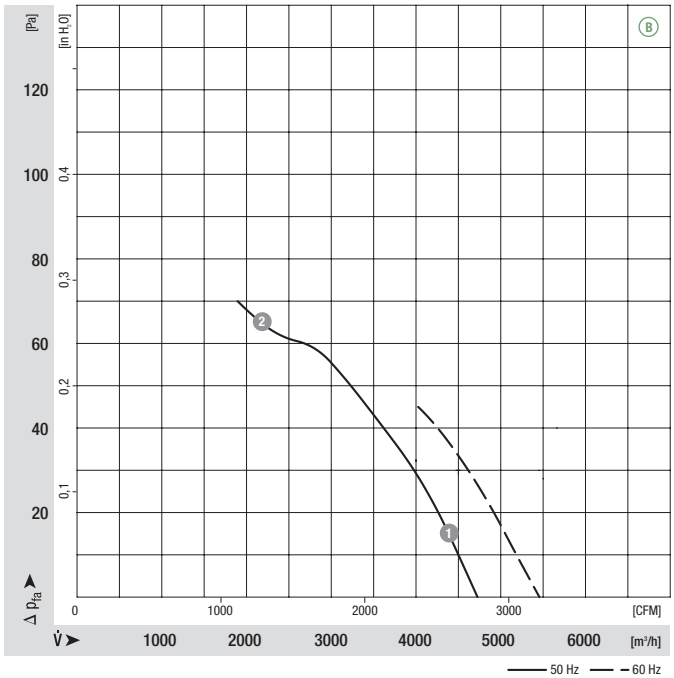

	n [rpm]	P_1 [W]	I [A]
B 1	930	171	0.82
B 2	870	200	0.94

AC axial fans

S series, Ø 420 / 450, drawings of directions of air flow "V" and "A"

Without attachments

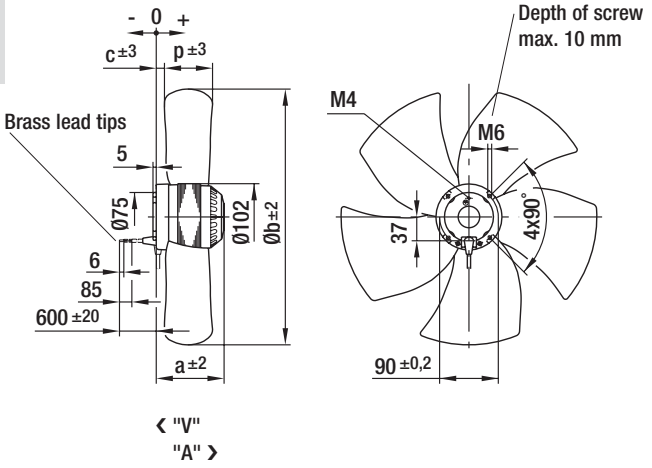

Type		a	b	c	p
A6E 420-AP02 -01	"V"	117.0	418.0	2.0	89.0
A6E 420-AP02 -02	"A"	117.0	418.0	21.0	89.0
A6E 450-AP02 -01	"V"	129.0	446.0	10.0	92.0
A6E 450-AP02 -02	"A"	129.0	446.0	25.0	92.0

With full round nozzle

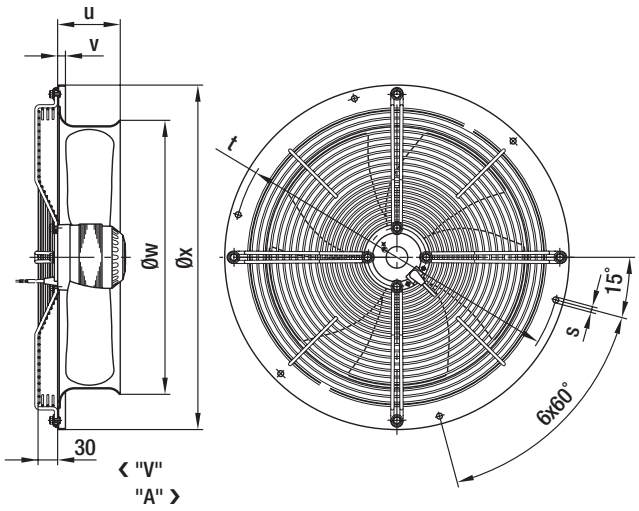

Type		s	t	u	v	w	x
W6E 420-CP02 -30	"V"	9.0	520.0	96.0	12.0	447.0	544.0
W6E 420-CP02 -31	"A"	9.0	520.0	96.0	12.0	447.0	544.0
W6E 450-CP02 -01	"V"	11.0	578.0	100.0	14.0	465.0	607.0
W6E 450-CP02 -02	"A"	11.0	578.0	100.0	14.0	465.0	607.0

With guard grille for full nozzle

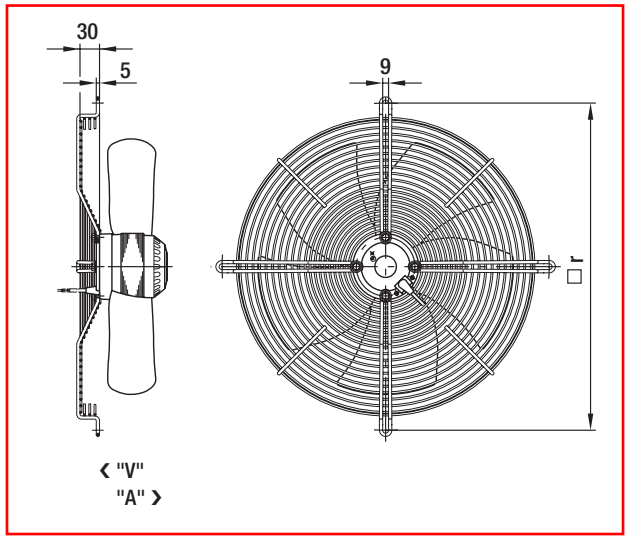

Type		r
S6E 420-BP02 -30	"V"	502.0
S6E 420-BP02 -31	"A"	502.0
S6E 450-BP02 -01	"V"	522.0
S6E 450-BP02 -02	"A"	522.0

ebmpapst



With guard grille for short nozzle

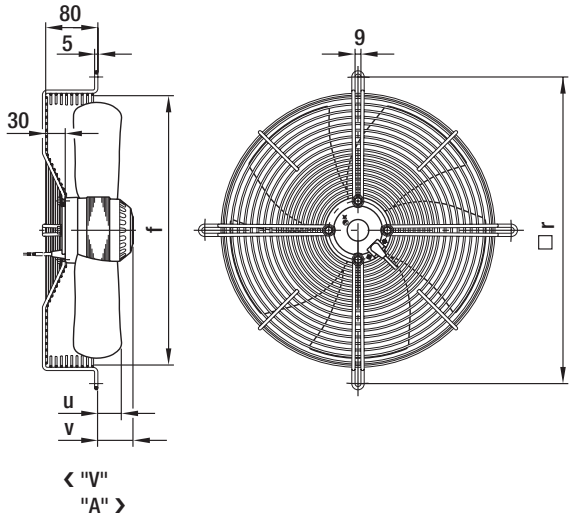

Type		f	r	u	v
S6E 420-AP02 -30	"V"	452.0	502.0	41.0	67.0
S6E 420-AP02 -31	"A"	452.0	502.0	60.0	67.0
S6E 450-AP02 -01	"V"	476.0	522.0	52.0	79.0
S6E 450-AP02 -02	"A"	476.0	522.0	67.0	79.0