AC axial compact fan

sickled blades (S series), single inlet

ebm-papst Mulfingen GmbH & Co. KG
Bachmühle 2 · D-74673 Mulfingen
Phone +49 7938 81-0
Fax +49 7938 81-110
info1@de.ebmpapst.com
www.ebmpapst.com

Limited partnership · Headquarters Mulfingen
County court Stuttgart · HRA 590344

General partner Elektrobau Mulfingen GmbH · Headquarters Mulfingen
County court Stuttgart · HRB 590142

Nominal data

Type	**W2D200-HH04-10**
Motor	**M2D068-BF**

Phase		3~	3~
Nominal voltage	VAC	400	400
Nominal voltage range	VAC	380 .. 480	380 .. 480
Connection		Y	Y
Frequency	Hz	50	60
Type of data definition		fa	fa
Valid for approval / standard		CE	CE
Speed	min^{-1}	2500	2650
Power input	W	52	62
Current draw	A	0.11	0.11
Min. ambient temperature	°C	-25	-25
Max. ambient temperature	°C	80	80
Starting current	A	0.23	0.22

ml = Max. load · me = Max. efficiency · fa = Running at free air · cs = Customer specs · cu = Customer unit
Subject to alterations

AC axial compact fan

sickled blades (S series), single inlet

Technical features

Mass	2.0 kg
Size	200 mm
Surface of rotor	Coated in black
Material of blades	Sheet steel, coated in black
Material of wall ring	Die-cast aluminium
Number of blades	9
Direction of air flow	"V"
Direction of rotation	Counter-clockwise, seen on rotor
Type of protection	IP 44; Depending on installation and position
Insulation class	"F"
Humidity class	F2-2
Max. permissible ambient motor temp. (transp./ storage)	+ 80 °C
Min. permissible ambient motor temp. (transp./storage)	- 40 °C
Mounting position	Any
Condensate discharge holes	None
Operation mode	S1
Motor bearing	Ball bearing
Touch current acc. IEC 60990 (measuring network Fig. 4, TN system)	< 0.75 mA
Cable exit	Axial
Protection class	I (if protective earth is connected by customer)
Product conforming to standard	EN 60335-1, motor does not have factory-installed overheating protection; CE
Approval	CSA C22.2 Nr.100; UL 1004-1

ebm-papst Mulfingen GmbH & Co. KG · Bachmühle 2 · D-74673 Mulfingen · Phone +49 (0) 7938 81-0 · Fax +49 (0) 7938 81-110 · info1@de.ebmpapst.com · www.ebmpapst.com

AC axial compact fan

sickled blades (S series), single inlet

Product drawing

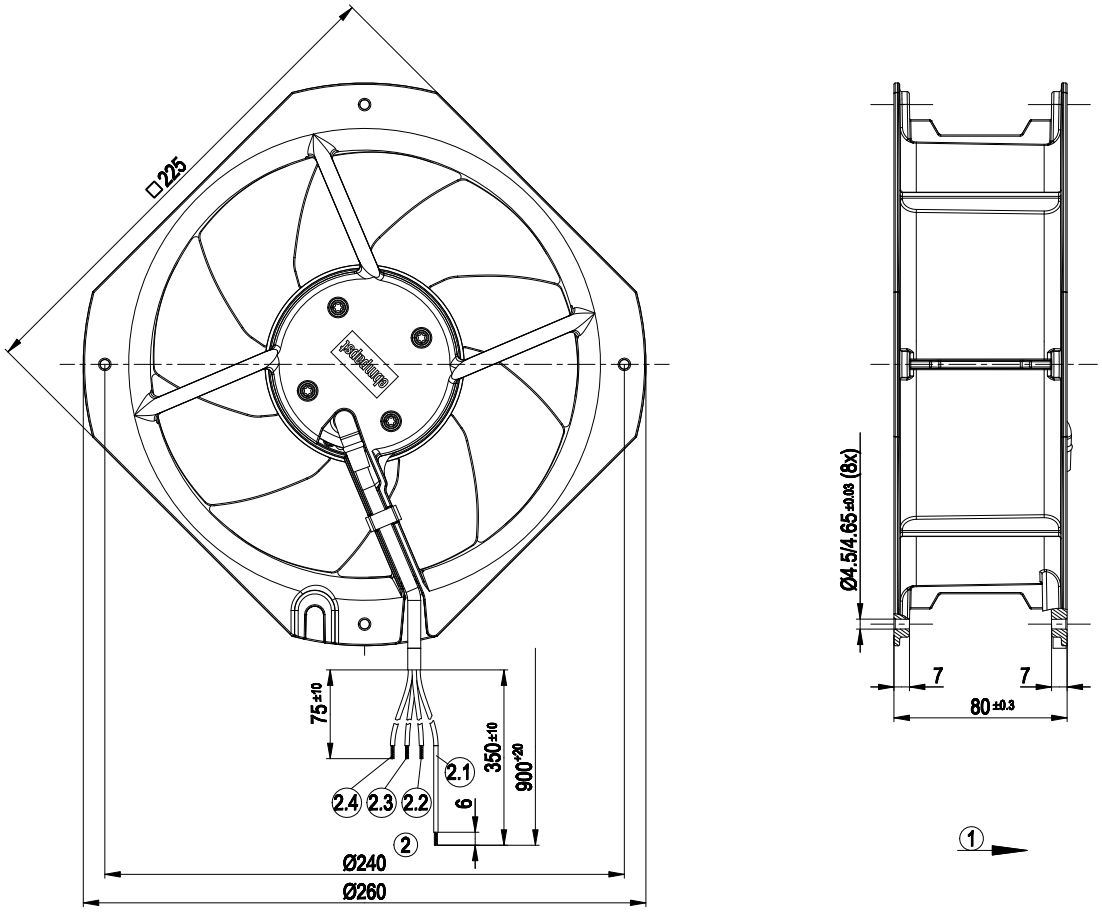

1	Direction of air flow "V"
2	Connection line silicone 4G 1 mm², 4x lead tips crimped
2.1	green/yellow
2.2	blue
2.3	brown
2.4	black

ebm-papst Mulfingen GmbH & Co. KG · Bachmühle 2 · D-74673 Mulfingen · Phone +49 (0) 7938 81-0 · Fax +49 (0) 7938 81-110 · info1@de.ebmpapst.com · www.ebmpapst.com

AC axial compact fan

sickled blades (S series), single inlet

Connection screen

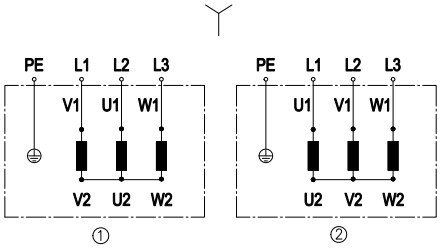

Change direction of rotation by reversing two phases

	Three-phase motor
Y	Star connection
1	Anti-clockwise operation
L1	= V1 = blue
L2	= U1 = black
L3	= W1 = brown
2	Clockwise operation
L1	= U1 = black
L2	= V1 = blue
L3	= W1 = brown
PE	green / yellow

ebm-papst Mulfingen GmbH & Co. KG · Bachmühle 2 · D-74673 Mulfingen · Phone +49 (0) 7938 81-0 · Fax +49 (0) 7938 81-110 · info1@de.ebmpapst.com · www.ebmpapst.com

AC axial compact fan

sickled blades (S series), single inlet

Charts: Air flow 50 Hz

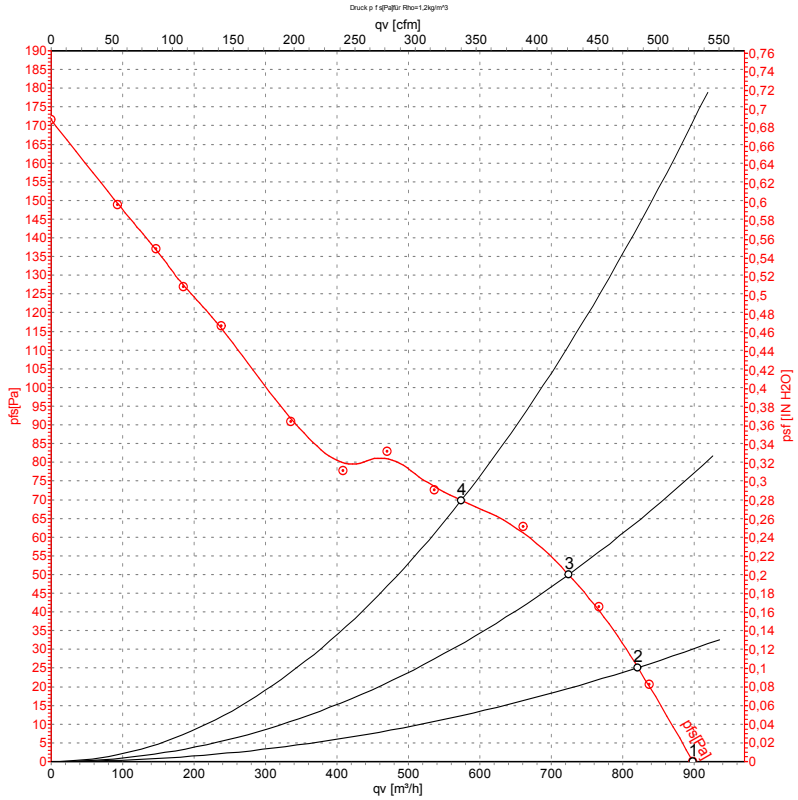

Measurement: LU-21426

Air performance measured as per ISO 5801 Installation category A. For detailed information on the measuring set-up, please contact ebm-papst. Suction-side noise levels: LwA measured as per ISO 13347 / LpA measured with 1m distance to fan axis. The values given are valid under the measuring conditions mentioned above and may vary according to the actual installation situation. With any deviation from the standard set-up, the specific values have to be checked and reviewed with the unit installed.

Measured values

	U	f	n	P_e	I	qv	p_{fs}
	V	Hz	min^{-1}	W	A	m^3/h	Pa
1	400	50	2500	52	0.11	900	0
2	400	50	2450	56	0.11	820	25
3	400	50	2400	58	0.11	725	50
4	400	50	2350	61	0.11	575	70

U = Supply voltage · f = Frequency · n = Speed · P_e = Power input · I = Current draw · qv = Air flow · p_{fs} = Pressure increase

ebm-papst Mulfingen GmbH & Co. KG · Bachmühle 2 · D-74673 Mulfingen · Phone +49 (0) 7938 81-0 · Fax +49 (0) 7938 81-110 · info1@de.ebmpapst.com · www.ebmpapst.com

AC axial compact fan

sickled blades (S series), single inlet

Charts: Air flow 60 Hz

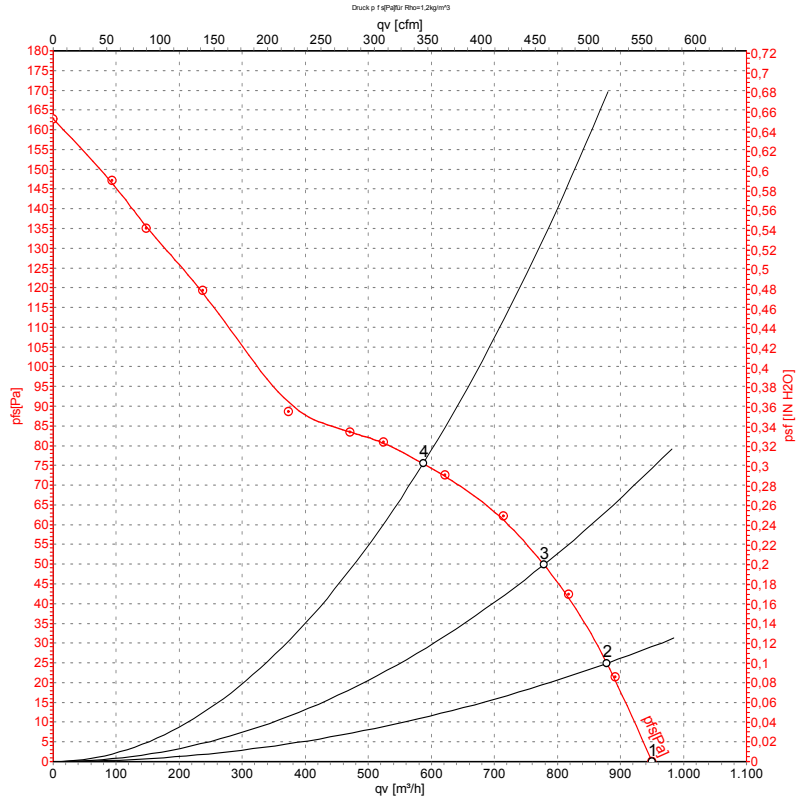

Measurement: LU-21427

Air performance measured as per ISO 5801 Installation category A. For detailed information on the measuring set-up, please contact ebm-papst. Suction-side noise levels: LwA measured as per ISO 13347 / LpA measured with 1m distance to fan axis. The values given are valid under the measuring conditions mentioned above and may vary according to the actual installation situation. With any deviation from the standard set-up, the specific values have to be checked and reviewed with the unit installed.

Measured values

	U	f	n	P_e	I	qv	p_{fs}
	V	Hz	min^{-1}	W	A	m^3/h	Pa
1	400	60	2650	62	0.11	950	0
2	400	60	2585	66	0.11	880	25
3	400	60	2505	70	0.11	780	50
4	400	60	2410	73	0.12	585	75

U = Supply voltage · f = Frequency · n = Speed · P_e = Power input · I = Current draw · qv = Air flow · p_{fs} = Pressure increase

ebm-papst Mulfingen GmbH & Co. KG · Bachmühle 2 · D-74673 Mulfingen · Phone +49 (0) 7938 81-0 · Fax +49 (0) 7938 81-110 · info1@de.ebmpapst.com · www.ebmpapst.com